Licitações

DESO

Licitação [nº 1070740]

Opções

Cliente	DESO / (1) CIA SANEAMENTO DE SERGIPE DESO		
Pregoeiro	DIANE SANTOS PINHEIRO		
Resumo da licitação	REGISTRO DE PREÇOS, PELO MENOR PREÇO POR LOTE, NO PRAZO DE 12 (DOZE) MESES, PARA EVENTUAL E FUTURA AQUISIÇÃO DE EQUIPAMENTOS ELÉTRICOS – SOFTSTARTERS.		
Edital	025/2025	Processo	7796/2025
Modalidade/tipo	Pregão	Tipo	Menor preço
Participação do fornecedor	Ampla	Prazo para impugnação até	5 dia(s)
Situação da licitação	Disputa encerrada	Data de publicação	20/05/2025
Início acolhimento de propostas	20/05/2025-08:00	Limite acolhimento de propostas	30/05/2025-08:15
Abertura das propostas	30/05/2025-08:15	Data e a hora da disputa	30/05/2025-08:30
Idioma da licitação	Português	Moeda da licitação	(R$) Real
Abrangência da disputa	Nacional	Moeda da proposta	Moeda da licitação
Forma de condução	Eletrônico	Equalização ICMS	Não
Tipo de encerramento da disputa	Randômico		

Lote [nº 2]

mostrar demais lotes

Opções

Resumo do lote	EQUIPAMENTOS ELÉTRICOS □ SOFTSTARTERS.		
Tratamento aplicado	Com tratamento diferenciado para ME/EPP/COOP ME/EPP/COOP		
Tipo de disputa	Com disputa em sessão pública	Critério de seleção	Todas as propostas
Situação do lote	Arrematado	Data e o horário	30/05/2025-09:14:54:638
Tempo mínimo lances intermediários	20 segundo(s)	Tempo mínimo cobrir melhor oferta	3 segundo(s)
Tempo aleatório de disputa	0 - 30 minutos		
Intervalo mínimo diferença de valores	R$ 0,01	Valor mínimo cobrir melhor oferta	R$ 0,01
CNPJ	09.504.672/0001-09		
Fornecedor	VALE AUTOMACAO INDUSTRIAL LTDA		
Telefone	(71) 999742798		
Nome contato	NOBEL GRALEB		
Arrematado	R$ 307.000,00		

© Banco do Brasil

TRIBUNAL DE CONTAS DA UNIÃO

Consulta Consolidada de Pessoa Jurídica

Este relatório tem por objetivo apresentar os resultados consolidados de consultas eletrônicas realizadas diretamente nos bancos de dados dos respectivos cadastros. A responsabilidade pela veracidade do resultado da consulta é do Órgão gestor de cada cadastro consultado. A informação relativa à razão social da Pessoa Jurídica é extraída do Cadastro Nacional da Pessoa Jurídica, mantido pela Receita Federal do Brasil.

Consulta realizada em: 30/05/2025 09:17:54

Informações da Pessoa Jurídica:

Razão Social: **VALE AUTOMACAO INDUSTRIAL LTDA**
CNPJ: **09.504.672/0001-09**

Resultados da Consulta Eletrônica:

Órgão Gestor: **TCU**
Cadastro: **Licitantes Inidôneos**
Resultado da consulta: **Nada Consta**

Para acessar a certidão original no portal do órgão gestor, clique AQUI.

Órgão Gestor: **CNJ**
Cadastro: **CNIA - Cadastro Nacional de Condenações Cíveis por Ato de Improbidade Administrativa e Inelegibilidade**
Resultado da consulta: **Nada Consta**

Para acessar a certidão original no portal do órgão gestor, clique AQUI.

Órgão Gestor: **Portal da Transparência**
Cadastro: **Cadastro Nacional de Empresas Inidôneas e Suspensas**
Resultado da consulta: **Nada Consta**

Para acessar a certidão original no portal do órgão gestor, clique AQUI.

Órgão Gestor: **Portal da Transparência**
Cadastro: **CNEP - Cadastro Nacional de Empresas Punidas**
Resultado da consulta: **Nada Consta**

Para acessar a certidão original no portal do órgão gestor, clique AQUI.

Obs: A consulta consolidada de pessoa jurídica visa atender aos princípios de simplificação e racionalização de serviços públicos digitais. Fundamento legal: Lei nº 12.965, de 23 de abril de 2014, Lei nº 13.460, de 26 de junho de 2017, Lei nº 13.726, de 8 de outubro de 2018, Decreto nº 8.638 de 15, de janeiro de 2016.

CADFIMP - Cadastro de Fornecedores Impedidos de Licitar e Contratar com a Administração Pública Estadual (Instituído pelo Decreto nº 24.912 de 20 de dezembro de 2007)

CPF / CNPJ / Nome / Razão Social: VALE AUTOMACAO INDUSTRIAL LTDA

Pesquisar

Licitações e Contratos já possuem pesquisar internamente!

Fornecedores Penalizados

VALE AUTOMACAO INDUSTRIAL LTDA

01/01/2010 - 30/05/2025

Pesquisar

Listado registro 0 até 0 de 0

Empresa	Penalidade	Base Legal	Prazo de Impedimento

ANEXO I – PROPOSTA COMERCIAL

À

DESO

Ref. Pregão Eletrônico nº 025/2025 Lote 02

Prezados Senhores,

Pela presente formulamos proposta comercial para REGISTO DE PREÇOS Objeto da Licitação, PARA EVENTUAL E FUTURA AQUISIÇÃO DE EQUIPAMENTOS ELÉTRICOS – SOFTSTARTERS. conforme discriminado no Anexo XX do Termo de Referência, que integra o instrumento convocatório da licitação em epígrafe.

IDENTIFICAÇÃO DO LICITANTE	
RAZÃO SOCIAL: VALE AUTOMAÇÃO INDUSTRIAL LTDA	
CNPJ: 09.504672/0001-09	INSCRIÇÃO ESTADUAL: 256.515.581
ENDEREÇO: Rua: General Osório, 4584 - Galpão 16 fundos - Sala 01	
TELEFONES: (47) 3285-9002 (71) 999742798	
E-MAIL: nobel.oliveira@valeautomacao.com - portalba@valeautomacao.com	
DADOS BANCÁRIOS	
BANCO: Banco do Brasil: 001	
AGÊNCIA: 0095-7	CONTA CORRENTE: 29236-2
DADOS DO RESPONSÁVEL PELA ASSINATURA DO INSTRUMENTO CONTRATUAL	
NOME: DANIEL BERNS	
RG: 4459438	ÓRGÃO EMISSOR: SSP – SC
CPF: 042.069.909-05	CARGO: DIRETOR

LOTE 02						
Item	Especificação do Produto	Und	Marca	Quant. Total	Valor	
					Unitário	Total
01	SOFT STARTER ATS430 210A 208 A600V REF: ATS430C21S6	PÇ	SCHNEIDER	15	R$ 8.000,00	R$120.000,00
02	SOFT STARTER ATS430 410A 208 A600V REF: ATS430C41S6	PÇ	SCHNEIDER	10	R$ 9.700,00	R$97.000,00
03	SOFTSTARTER ATS480 660A 208 A690V REF: ATS480C66Y	PÇ	SCHNEIDER	03	R$ 30.000,00	R$90.000,00
	TOTAL GERAL					R$307.000,00

Valor da nossa proposta é de R$ 307.000,00 TREZENTOS E SETE MIL REAIS
Validade da Proposta: 60 dias corridos, contados a partir da data da sessão pública;

- **Validade da Ata:** 12 meses;
- **Prazo de entrega:** 60 (Sessenta) dias sequenciais;
- **Local de Entrega:** Centro de Distribuição da DESO, localizado no endereço: Avenida Coletora "C", S/N, Conjunto Marcos Freire II, Nossa Senhora do Socorro, Sergipe, CEP: 49156-304.
- **Especificar detalhadamente cada item licitado, juntando portfólios e/ou catálogos com especificações precisas e ilustrações;**
- **Frete:** CIF

Declaramos que os preços ora propostos incluem todas as despesas diretas, indiretas, impostos, benefícios, tributos, contribuições, seguros e licenças de modo a se constituírem a única e total contraprestação pela execução do **FORNECIMENTO**.

Declaramos, ainda, que estamos cientes e de acordo que as intimações ou notificações decorrentes da contratação, caso seja necessário, serão formalizadas eletronicamente para o e-mail da empresa, informado nesta Proposta Comercial, sendo o único responsável em manter-lhe atualizado junto a DESO, verificar caixa de SPAM e não obstante assegurar que o mesmo não esteja com a caixa de entrada cheia.

Portanto, estamos cientes e de acordo com os termos estabelecidos no Edital e seus anexos.

BLUMENAU SC 30/05/2025

Atenciosamente,

DANIEL BERNS:04206990905

Assinado de forma digital por DANIEL BERNS:04206990905
Dados: 2025.05.30 10:37:33 -03'00'

_____

DANIEL BERNS

DIRETOR

REPÚBLICA FEDERATIVA DO BRASIL

CADASTRO NACIONAL DA PESSOA JURÍDICA

NÚMERO DE INSCRIÇÃO	COMPROVANTE DE INSCRIÇÃO E DE SITUAÇÃO CADASTRAL	DATA DE ABERTURA
09.504.672/0001-09 **MATRIZ**		**04/04/2008**

NOME EMPRESARIAL
VALE AUTOMACAO INDUSTRIAL LTDA

TÍTULO DO ESTABELECIMENTO (NOME DE FANTASIA)
VALE AUTOMACAO INDUSTRIAL

PORTE
DEMAIS

CÓDIGO E DESCRIÇÃO DA ATIVIDADE ECONÔMICA PRINCIPAL
46.73-7-00 - Comércio atacadista de material elétrico

CÓDIGO E DESCRIÇÃO DAS ATIVIDADES ECONÔMICAS SECUNDÁRIAS
26.51-5-00 - Fabricação de aparelhos e equipamentos de medida, teste e controle
43.99-1-99 - Serviços especializados para construção não especificados anteriormente
46.19-2-00 - Representantes comerciais e agentes do comércio de mercadorias em geral não especializado
46.63-0-00 - Comércio atacadista de Máquinas e equipamentos para uso industrial; partes e peças
47.42-3-00 - Comércio varejista de material elétrico
62.02-3-00 - Desenvolvimento e licenciamento de programas de computador customizáveis
62.03-1-00 - Desenvolvimento e licenciamento de programas de computador não-customizáveis
71.12-0-00 - Serviços de engenharia
82.11-3-00 - Serviços combinados de escritório e apoio administrativo
85.99-6-04 - Treinamento em desenvolvimento profissional e gerencial

CÓDIGO E DESCRIÇÃO DA NATUREZA JURÍDICA
206-2 - Sociedade Empresária Limitada

LOGRADOURO	NÚMERO	COMPLEMENTO
R GENERAL OSORIO	**4584**	**GALPAO16 FUNDOSSALA 01**

CEP	BAIRRO/DISTRITO	MUNICÍPIO	UF
89.032-240	**SALTO WEISSBACH**	**BLUMENAU**	**SC**

ENDEREÇO ELETRÔNICO	TELEFONE
NFE@VALEAUTOMACAO.COM	**(47) 3285-9002**

ENTE FEDERATIVO RESPONSÁVEL (EFR)
*****

SITUAÇÃO CADASTRAL	DATA DA SITUAÇÃO CADASTRAL
ATIVA	**04/04/2008**

MOTIVO DE SITUAÇÃO CADASTRAL

SITUAÇÃO ESPECIAL	DATA DA SITUAÇÃO ESPECIAL
********	********

Aprovado pela Instrução Normativa RFB nº 2.119, de 06 de dezembro de 2022.

Emitido no dia **01/11/2024** às **10:01:56** (data e hora de Brasília). Página: **1/1**

VALE AUTOMAÇÃO INDUSTRIAL LTDA

CNPJ Nº 09.504.672/0001-09
NIRE 42204088164

15ª ALTERAÇÃO DO CONTRATO SOCIAL

VALEMAT ADMINISTRADORA LTDA., pessoa jurídica de direito privado, inscrita no CNPJ sob o nº 46.315.976/0001-54, sediada à rua General Osório, nº 4584, Galpão 16, Fundos, Sala 01, Salto Weissbach, Blumenau/SC, CEP: 89.032-240, com seu contrato social arquivado na JUCESC sob o NIRE 42207125613, representada pelo administrador **Jonathan Russi,** brasileiro, nascido em 18/01/1989, solteiro, administrador, CPF nº 059.237.449-10, RG nº 4.607.199 SSP/SC, residente e domiciliado à rua dos Pioneiros, 233, Apto 608, Água Verde, Blumenau/SC, CEP 89042020; e,

DMG PARTICIPAÇÕES LTDA., inscrita no CNPJ sob nº 18.846.525/0001-08, NIRE 43207464931, sediada à rua Ruben Bento Alves, nº 4.548, apto 301, bairro Santa Catarina, Caxias do Sul/RS, CEP: 95.032-440, representada neste ato pelos administradores **Marcelo Oliboni Fiório**, brasileiro, nascido em 26/04/1990, solteiro, administrador, portador da cédula de identidade de RG nº 1.100.218.047 SSP/RS, inscrito no CPF sob nº 008.593.910-27, residente e domiciliado à Av. Rubem Bento Alves, 4548, apto 301, bairro Santa Catarina, Caxias do Sul/RS, CEP 95.032-318, e pela administradora **Marlova Oliboni Fiório**, brasileira, nascida em 25/08/1966, administradora, casada, portadora da cédula de identidade de RG nº 5.030.905.201 SSP/RS, inscrita no CPF sob nº. 440.376.000-72, residente e domiciliada à Av. Rubem Bento Alves, 4548, apto 301, bairro Santa Catarina, Caxias do Sul/RS, CEP 95.032-318;

Únicos sócios da Sociedade Limitada de nome empresarial **VALE AUTOMAÇÃO INDUSTRIAL LTDA,** registrada legalmente por contrato social devidamente arquivado nesta Junta Comercial do Estado de Santa Catarina, sob NIRE nº 42204088164, com sede Rua General Osorio, 4584, Galpão 16, Fundos, Sala 01, Salto Weissbach, Blumenau/SC, CEP 89032-240, devidamente inscrita no Cadastro Nacional de Pessoa Jurídica sob o nº 09.504.672/0001-09, deliberam de pleno e comum acordo ajustarem a presente alteração contratual, nos termos da Lei nº 10.406/2002, mediante as condições estabelecidas nas clausulas seguintes:

I) A sócia **DMG PARTICIPAÇÕES LTDA.**, já qualificada, representada neste ato pelos administradores **Marcelo Oliboni Fiório**, brasileiro, nascido em 26/04/1990, solteiro, administrador, portador da cédula de identidade de RG nº 1.100.218.047 SSP/RS, inscrito no CPF sob nº 008.593.910-27, residente e domiciliado à Av. Rubem Bento Alves, 4548, apto 301, bairro Santa Catarina, Caxias do Sul/RS, CEP 95.032-318, e pela administradora **Marlova Oliboni Fiório**, brasileira, nascida em

Junta Comercial do Estado de Santa Catarina 14/10/2024
Certifico o Registro em 14/10/2024 Data dos Efeitos 10/10/2024
Arquivamento 20241808910 Protocolo 241808910 de 04/10/2024 NIRE 42204088164
Nome da empresa VALE AUTOMACAO INDUSTRIAL LTDA
Este documento pode ser verificado em http://regin.jucesc.sc.gov.br/autenticacaoDocumentos/autenticacao.aspx
Chancela 184941654979200
Esta cópia foi autenticada digitalmente e assinada em 14/10/2024LUCIANO LEITE KOWALSKI - Secretário-Geral

25/08/1966, administradora, casada, portadora da cédula de identidade de RG nº 5.030.905.201 SSP/RS, inscrita no CPF sob nº. 440.376.000-72, residente e domiciliada à Av. Rubem Bento Alves, 4548, apto 301, bairro Santa Catarina, Caxias do Sul/RS, CEP 95.032-318, **cede e transfere, onerosamente**, a totalidade da respectiva participação social na **Vale Automação Industrial Ltda.,** ou seja, **35% (trinta e cinco por cento)** de participação no quadro de sócios, representativa da transferência de titularidade de 1.887.685 (um milhão, oitocentas e oitenta e sete mil e seiscentas e oitenta e cinco) quotas, ao valor de R$ 1,00 (um real) cada uma, equivalente ao capital social representativo de R$ 1.887.685,00 (um milhão, oitocentas e oitenta e sete mil e seiscentas e oitenta e cinco reais), para a **VALEMAT ADMINISTRADORA LTDA.**, pessoa jurídica de direito privado, inscrita no CNPJ sob o nº 46.315.976/0001-54, sediada à rua General Osório, nº 4584, Galpão 16, Fundos, Sala 01, Salto Weissbach, Blumenau/SC, CEP: 89.032-240, com seu contrato social devidamente arquivado na JUCESC sob o NIRE 42207125613, representada pelo administrador **Jonathan Russi,** brasileiro, nascido em 18/01/1989, solteiro, administrador, CPF nº 059.237.449-10, RG nº 4.607.199 SSP/SC, residente e domiciliado à rua dos Pioneiros, 233, Apto 608, Água Verde, Blumenau/SC, CEP 89042020, efetivando os termos do contrato particular de cessão e transferência onerosa de quotas, tornando-se única sócia da **Vale Automação Industrial Ltda.**

II) Em razão das mudanças promovidas nos itens anteriores, fica alterada a Cláusula Quinta do Contrato Social, que passa a vigorar com a seguinte redação:

CLÁUSULA QUINTA: *O capital social é de R$ 5.393.387,00 (cinco milhões, trezentos e noventa e três mil, e trezentos e oitenta e sete reais) dividido em 5.393.387 (cinco milhões, trezentos e noventa e três mil, e trezentos e oitenta e sete) quotas, no valor de R$ 1,00 (um real) cada, totalmente subscrito e integralizado em moeda corrente nacional, conforme* segue:

SÓCIOS	***QUOTAS***	***PARTICIPAÇÃO***	***VALOR (R$)***
VALEMAT ADMINISTRADORA LTDA.	*5.393.387*	*100%*	*5.393.387,00*
TOTAL	***5.393.387***	***100***	***5.393.387,00***

Parágrafo Único. *As quotas de capital foram integralizadas em moeda corrente nacional no ato da constituição.*

III) A sócia retirante dá quitação à sociedade e à socia remanescente quanto às respectivas condições de sócios.

IV) A sócia remanescente delibera pela dissolução do conselho de administração, com o propósito de otimizar o processo de decisão, poupar tempo e economizar recursos, de forma que o representante legal da sociedade empresária será a figura do administrador social, este que responderá e prestará contas à reunião de sócios e observará durante a gestão os propósitos e os limites do contrato social.

Junta Comercial do Estado de Santa Catarina 14/10/2024
Certifico o Registro em 14/10/2024 Data dos Efeitos 10/10/2024
Arquivamento 20241808910 Protocolo 241808910 de 04/10/2024 NIRE 42204088164
Nome da empresa VALE AUTOMACAO INDUSTRIAL LTDA
Este documento pode ser verificado em http://regin.jucesc.sc.gov.br/autenticacaoDocumentos/autenticacao.aspx
Chancela 184941654979200
Esta cópia foi autenticada digitalmente e assinada em 14/10/2024LUCIANO LEITE KOWALSKI - Secretário-Geral

V) A sócia delibera pela eleição ao cargo de **administrador**, o Sr. **JONATHAN RUSSI,** brasileiro, nascido em 18/01/1989, solteiro, administrador, CPF nº 059.237.449-10, RG nº 4.607.199 SSP/SC, residente e domiciliado à rua dos Pioneiros, 233, Apto 608, Água Verde, Blumenau/SC, CEP 89042020, e o Sr. **DANIEL BERNS**, nacionalidade brasileira, nascido em 04/02/1985, casado em comunhão parcial de bens, empresário, CPF nº 042.069.909-05, carteira de identidade nº 4459438, órgão expedidor SSP – SC, residente e domiciliado na Rua Luiz Bittelbrunn, 277 – Velha, Blumenau-SC, CEP: 89040-080, Brasil, que permanecerão no cargo por tempo indeterminado, e ao qual se incumbirão de todas as operações e representará a sociedade ativa e passivamente, de forma **ISOLADA**, judicial ou extrajudicialmente, exclusivamente para os negócios da própria sociedade, sempre respeitando as decisões dos sócios, ficando-lhe vedado, entretanto, valer-se da razão social para finalidades estranhas à execução do objeto social.

VI) Os administradores não-sócios, ora eleitos, declaram, sob as penas da lei, que não estão impedidos de exercer a administração da sociedade por lei especial ou em virtude de condenação criminal, ou por se encontrarem sob os efeitos dela, a pena que vede, ainda que temporariamente, o acesso a cargos públicos; ou por crime falimentar, de prevaricação, peita ou suborno, concussão, peculato ou contra a economia popular, contra o sistema financeiro nacional, contra normas de defesa da concorrência, contra relações de consumo, fé pública ou a propriedade;

VII) Tendo em vista a alteração na administração da sociedade, fica alterada a cláusula sétima, que passa a vigorar com a seguinte redação;

CLÁUSULA SÉTIMA: *A administração da sociedade é exercida exclusivamente pelo "administrador não-sócio", a saber, pelo Sr.* ***JONATHAN RUSSI,*** *brasileiro, nascido em 18/01/1989, solteiro, administrador, CPF nº 059.237.449-10, RG nº 4.607.199 SSP/SC, residente e domiciliado à rua dos Pioneiros, 233, Apto 608, Água Verde, Blumenau/SC, CEP 89042020, e o Sr.* ***DANIEL BERNS****, nacionalidade brasileira, nascido em 04/02/1985, casado em comunhão parcial de bens, empresário, CPF nº 042.069.909-05, carteira de identidade nº 4459438, órgão expedidor SSP – SC, residente e domiciliado na Rua Luiz Bittelbrunn, 277 – Velha, Blumenau-SC, CEP: 89040-080, Brasil, que permanecerão no cargo por tempo indeterminado, e ao qual se incumbirão de todas as operações e representará a sociedade ativa e passivamente, de forma* ***ISOLADA****, judicial ou extrajudicialmente, exclusivamente para os negócios da própria sociedade, sempre respeitando as decisões dos sócios.*

VIII) Permanecem inalteradas as demais cláusulas do Contrato Social.

IX) Em razão das modificações acima, os sócios resolvem consolidar os termos do contrato social, segundo o Código Civil (Lei nº 10.406/2002), mediante as cláusulas e condições descrita abaixo.

Junta Comercial do Estado de Santa Catarina 14/10/2024
Certifico o Registro em 14/10/2024 Data dos Efeitos 10/10/2024
Arquivamento 20241808910 Protocolo 241808910 de 04/10/2024 NIRE 42204088164
Nome da empresa VALE AUTOMACAO INDUSTRIAL LTDA
Este documento pode ser verificado em http://regin.jucesc.sc.gov.br/autenticacaoDocumentos/autenticacao.aspx
Chancela 184941654979200
Esta cópia foi autenticada digitalmente e assinada em 14/10/2024LUCIANO LEITE KOWALSKI - Secretário-Geral

VALE AUTOMAÇÃO INDUSTRIAL LTDA

CNPJ Nº 09.504.672/0001-09
NIRE 42204088164

CONTRATO SOCIAL CONSOLIDADO

CLÁUSULA PRIMEIRA: A sociedade gira sob o nome empresarial **VALE AUTOMAÇÃO INDUSTRIAL LTDA.**, adotando como titulo do estabelecimento **''VALE MATERIAIS ELÉTRICOS**''.

CLAUSULA SEGUNDA: A sociedade iniciou suas atividades em 15 de fevereiro de 2008 e seu prazo de duração é por tempo indeterminado.

CLAUSULA TERCEIRA: A sociedade tem sede na Rua General Osorio, 4584, Galpão 16, Fundos, Sala 01, Salto Weissbach, Blumenau/SC, CEP 89.032-240.

Paragrafo único. A sociedade possui as seguintes filiais:

Filial nº 02: Rua Mundo, 121, Edifício Tecnovia, Sala 208, bairro Trobogy, na cidade de Salvador/BA, CEP 41745-715, inscrita no CNPJ 09.504.672/0002-90 e no NIRE 29902029686;

Filial nº 03: Rua Das Araucárias no 521, bairro Barigui, na cidade de Araucária/PR, CEP: 83.707-642, inscrita no CNPJ 09.504.672/0003-70 e no NIRE 41901972499;

Filial nº 04: Avenida Ruben Bento Alves, 4626, fundos, sala 01, bairro Santa Catarina, Caxias do Sul/RS, CEP: 95032-318, inscrita no CNPJ 09.504.672/0004-51 e no NIRE 43920040034.

CLÁUSULA QUARTA: A sociedade tem por objeto:

COMÉRCIO ATACADISTA DE MATERIAL ELÉTRICO; FABRICAÇÃO DE INSTRUMENTOS DE INSTRUMENTOS E EQUIPAMENTOS DE AUTOMAÇÃO INDUSTRIAL; COMÉRCIO ATACADISTA DE MÁQUINAS E EQUIPAMENTOS PARA USO INDUSTRIAL; TREINAMENTO EM DESENVOLVIMENTO PROFISSIONAL E GERENCIAL; DESENVOLVIMENTO E LICENCIAMENTO DE PROGRAMAS DE COMPUTADOR CUSTOMIZÁVEIS; DESENVOLVIMENTO E LICENCIAMENTO DE PROGRAMAS DE COMPUTADOR NÃO CUSTOMIZÁVEIS; SERVIÇOS COMBINADOS DE ESCRITÓRIO E APOIO ADMINISTRATIVO; SERVIÇO DE ENGENHARIA; COMERCIO VAREJISTA DE MATERIAL ELÉTRICO; REPRESENTANTES COMERCIAIS E AGENTES DO COMÉRCIO DE MERCADORIAS; SERVIÇOS ESPECIALIZADOS PARA CONSTRUÇÃO.

Junta Comercial do Estado de Santa Catarina 14/10/2024
Certifico o Registro em 14/10/2024 Data dos Efeitos 10/10/2024
Arquivamento 20241808910 Protocolo 241808910 de 04/10/2024 NIRE 42204088164
Nome da empresa VALE AUTOMACAO INDUSTRIAL LTDA
Este documento pode ser verificado em http://regin.jucesc.sc.gov.br/autenticacaoDocumentos/autenticacao.aspx
Chancela 184941654979200
Esta cópia foi autenticada digitalmente e assinada em 14/10/2024LUCIANO LEITE KOWALSKI - Secretário-Geral

CLÁUSULA QUINTA: O capital social é de R$ 5.393.387,00 (cinco milhões, trezentos e noventa e três mil, e trezentos e oitenta e sete reais) dividido em 5.393.387 (cinco milhões, trezentos e noventa e três mil, e trezentos e oitenta e sete) quotas, no valor de R$ 1,00 (um real) cada, totalmente subscrito e integralizado em moeda corrente nacional, conforme segue:

SÓCIOS	QUOTAS	PARTICIPAÇÃO	VALOR (R$)
VALEMAT ADMINISTRADORA LTDA.	5.393.387	100%	5.393.387,00
TOTAL	**5.393.387**	**100**	**5.393.387,00**

Parágrafo Único. As quotas de capital foram integralizadas em moeda corrente nacional no ato da constituição**.**

CLÁUSULA SEXTA: A responsabilidade dos sócios é na forma da legislação em vigor, limitada, mas todos respondem solidariamente, conforme Art. 1.052 do Código Civil.

CLÁUSULA SÉTIMA: A administração da sociedade é exercida exclusivamente pelo "administrador não-sócio", a saber, pelo Sr. **JONATHAN RUSSI,** brasileiro, nascido em 18/01/1989, solteiro, administrador, CPF nº 059.237.449-10, RG nº 4.607.199 SSP/SC, residente e domiciliado à rua dos Pioneiros, 233, Apto 608, Água Verde, Blumenau/SC, CEP 89042020, e o Sr. **DANIEL BERNS**, nacionalidade brasileira, nascido em 04/02/1985, casado em comunhão parcial de bens, empresário, CPF nº 042.069.909-05, carteira de identidade nº 4459438, órgão expedidor SSP – SC, residente e domiciliado na Rua Luiz Bittelbrunn, 277 – Velha, Blumenau-SC, CEP: 89040-080, Brasil, que permanecerão no cargo por tempo indeterminado, e ao qual se incumbirão de todas as operações e representará a sociedade ativa e passivamente, de forma **ISOLADA**, judicial ou extrajudicialmente, exclusivamente para os negócios da própria sociedade, sempre respeitando as decisões dos sócios.

CLÁUSULA OITAVA: Fica vedado também, o uso do nome empresarial da sociedade em negócios estranhos ao objeto social, bem como conceder avais, fianças ou outras garantias em favor de terceiros, exceto quando houver comum cordo entre os sócios.

CLÁUSULA NONA: Os sócios, no exercício da administração, poderão retirar valor mensal, a titulo de pró-labore, que será fixada entre si, de acordo com a situação econômica da sociedade.

CLÁUSULA DÉCIMA: O exercício social encerrar-se-á em 31 de dezembro de cada ano, porém, em qualquer época, dia e mês do ano em exercício, poderá ser procedido o levantamento do balanço em exercício. Os lucros ou prejuízos apurados terão à destinação que os sócios decidirem.

Junta Comercial do Estado de Santa Catarina 14/10/2024
Certifico o Registro em 14/10/2024 Data dos Efeitos 10/10/2024
Arquivamento 20241808910 Protocolo 241808910 de 04/10/2024 NIRE 42204088164
Nome da empresa VALE AUTOMACAO INDUSTRIAL LTDA
Este documento pode ser verificado em http://regin.jucesc.sc.gov.br/autenticacaoDocumentos/autenticacao.aspx
Chancela 184941654979200
Esta cópia foi autenticada digitalmente e assinada em 14/10/2024LUCIANO LEITE KOWALSKI - Secretário-Geral

Parágrafo Único. Por deliberação dos sócios, a distribuição de lucros ou prejuízos verificados poderá ser em qualquer período do ano a partir do resultado do período apurado.

CLÁUSULA DÉCIMA PRIMEIRA: As quotas da sociedade são indivisíveis e não poderão ser cedidas ou transferidas sem o expresso consentimento da sociedade, cabendo em igualdade de preços e condições, o direito de preferência aos sócios que queiram adquiri-las na proporção de suas participações, no caso de algum sócio pretender ceder as que possuem.

CLÁUSULA DÉCIMA SEGUNDA: No caso de falecimento de sócio, a sociedade não será extinta, cabendo aos sócios remanescentes, determinar o levantamento de um balanço especial na data de falecimento ocorrido. Os herdeiros do sócio pré-morto elegerão entre si um representante que os representará nos negócios da sociedade.

CLÁUSULA DÉCIMA TERCEIRA: No caso de um dos sócios desejar se retirar da sociedade, deverá notificar o outro, por escrito, com antecedência de 60 (sessenta) dias e, seus haveres, apurados em balanço especial, serão pagos em 24 (vinte e quatro) prestações iguais e sucessivas, vencendo-se a primeira após 60 (sessenta) dias da data do balanço especial

CLÁUSULA DÉCIMA QUARTA: Por decisão de quotista que represente a maioria do capital social, poderá ser determinada a exclusão por justa causa de sócios do quadro social, nos termos do Artigo 1.085 da Lei nº 10.406/2002.

CLÁUSULA DÉCIMA QUINTA: As omissões ou dúvidas que possam ser suscitadas sobre o presente contrato, serão supridas ou resolvidas, automaticamente, com as normas da sociedade anônima e, noutras disposições legais que lhe forem aplicáveis.

CLÁUSULA DÉCIMA SEXTA: Os administradores declaram, sob as penas da Lei, de que não estão impedidos de exercer a administração da sociedade, por Lei especial ou em virtude de condenação criminal ou, por se encontrar(em) sob os efeitos dela, a pena que vede, ainda que temporariamente, o acesso a cargos públicos; ou por crime falimentar, de prevaricação, peita ou suborno, concussão, peculato ou, contra a economia popular, contra o sistema financeiro nacional, contra normas de defesa de concorrência, contra as relações de consumo, fé pública ou, a propriedade.

Junta Comercial do Estado de Santa Catarina 14/10/2024
Certifico o Registro em 14/10/2024 Data dos Efeitos 10/10/2024
Arquivamento 20241808910 Protocolo 241808910 de 04/10/2024 NIRE 42204088164
Nome da empresa VALE AUTOMACAO INDUSTRIAL LTDA
Este documento pode ser verificado em http://regin.jucesc.sc.gov.br/autenticacaoDocumentos/autenticacao.aspx
Chancela 184941654979200
Esta cópia foi autenticada digitalmente e assinada em 14/10/2024LUCIANO LEITE KOWALSKI - Secretário-Geral

CLÁUSULA DÉCIMA SÉTIMA: Fica eleito o foro da comarca de Blumenau/SC, para o exercício e o cumprimento dos direitos e obrigações resultantes deste contrato.

E, por se acharem em perfeito acordo com tudo o que aqui foi lavrado, assinam o presente instrumento contratual, e se obrigam fielmente por si e seus herdeiros a cumpri-los em todos os seus termos.

Blumenau/SC, 10 de agosto de 2024.

_____

VALEMAT ADMINISTRADORA LTDA.
*POR **JONATHAN RUSSI***
SÓCIO ADMINISTRADOR

_____

DMG PARTICIPAÇÕES LTDA.
*POR **MARCELO OLIBONI FIÓRIO***
ADMINISTRADOR

_____

DMG PARTICIPAÇÕES LTDA.
*POR **MARLOVA OLIBONI FIORIO***
ADMINISTRADORA

_____

JONATHAN RUSSI
ADMINISTRADOR ELEITO

_____

DANIEL BERNS
ADMINISTRADOR ELEITO

Junta Comercial do Estado de Santa Catarina 14/10/2024
Certifico o Registro em 14/10/2024 Data dos Efeitos 10/10/2024
Arquivamento 20241808910 Protocolo 241808910 de 04/10/2024 NIRE 42204088164
Nome da empresa VALE AUTOMACAO INDUSTRIAL LTDA
Este documento pode ser verificado em http://regin.jucesc.sc.gov.br/autenticacaoDocumentos/autenticacao.aspx
Chancela 184941654979200
Esta cópia foi autenticada digitalmente e assinada em 14/10/2024LUCIANO LEITE KOWALSKI - Secretário-Geral

JUCESC
Junta Comercial do Estado de
SANTA CATARINA

241808910

TERMO DE AUTENTICACAO

NOME DA EMPRESA	**VALE AUTOMACAO INDUSTRIAL LTDA**
PROTOCOLO	**241808910 - 04/10/2024**
ATO	**002 - ALTERACAO**
EVENTO	**021 - ALTERACAO DE DADOS (EXCETO NOME EMPRESARIAL)**

MATRIZ

NIRE 42204088164
CNPJ 09.504.672/0001-09
CERTIFICO O REGISTRO EM 14/10/2024
SOB N: 20241808910

EVENTOS

051 - CONSOLIDACAO DE CONTRATO/ESTATUTO ARQUIVAMENTO: 20241808910

REPRESENTANTES QUE ASSINARAM DIGITALMENTE

Cpf: 00859391027 - MARCELO OLIBONI FIORIO - Assinado em 10/10/2024 às 08:11:18

Cpf: 04206990905 - DANIEL BERNS - Assinado em 10/10/2024 às 08:11:18

Cpf: 05923744910 - JONATHAN RUSSI - Assinado em 10/10/2024 às 08:11:18

Cpf: 44037600072 - MARLOVA OLIBONI FIORIO - Assinado em 10/10/2024 às 08:11:18

Junta Comercial do Estado de Santa Catarina 14/10/2024
Certifico o Registro em 14/10/2024 Data dos Efeitos 10/10/2024
Arquivamento 20241808910 Protocolo 241808910 de 04/10/2024 NIRE 42204088164
Nome da empresa VALE AUTOMACAO INDUSTRIAL LTDA
Este documento pode ser verificado em http://regin.jucesc.sc.gov.br/autenticacaoDocumentos/autenticacao.aspx
Chancela 184941654979200
Esta cópia foi autenticada digitalmente e assinada em 14/10/2024LUCIANO LEITE KOWALSKI - Secretário-Geral

REPÚBLICA FEDERATIVA DO BRASIL
MINISTÉRIO DA INFRAESTRUTURA
SECRETARIA NACIONAL DE TRÂNSITO

CARTEIRA NACIONAL DE HABILITAÇÃO / DRIVER LICENSE / PERMISO DE CONDUCCIÓN

VÁLIDA EM TODO O TERRITÓRIO NACIONAL

2502152281

2 e 1 NOME E SOBRENOME: DANIEL BERNS

1ª HABILITAÇÃO: 06/06/2003

3 DATA, LOCAL E UF DE NASCIMENTO: 04/02/1985, BLUMENAU, SC

4a DATA EMISSÃO: 23/12/2022

4b VALIDADE: 22/12/2032

ACC: D

4c DOC IDENTIDADE / ÓRG EMISSOR / UF: 4459438 SSP SC

4d CPF: 042.069.909-05

5 Nº REGISTRO: 02896999617

9 CAT HAB: AB

NACIONALIDADE: BRASILEIRO

FILIAÇÃO: VALENTIM BERNS

LUZIA BERNS

7 ASSINATURA DO PORTADOR

9	10	11	12
ACC			
A		22/12/2032	
A1			
B		22/12/2032	
B1			
C			
C1			

9	10	11	12
D			
D1			
BE			
CE			
C1E			
DE			
D1E			

12 OBSERVAÇÕES
A

ASSINADO DIGITALMENTE
DEPARTAMENTO ESTADUAL DE TRÂNSITO
30885568856
SC182141896

LOCAL: FLORIANOPOLIS, SC

2502152281

SANTA CATARINA

2 e 1. Nome e Sobrenome / Name and Surname / Nombre y Apellidos – Primeira Habilitação / First Driver License / Primera Licencia de Conducir – 3. Data e Local de Nascimento / Date and Place of Birth DD/MM/YYYY / Fecha y Lugar de Nacimiento – 4a. Data de Emissão / Issuing Date DD/MM/YYYY / Fecha de Emisión – 4b. Data de Validade / Expiration Date DD/MM/YYYY / Valido Hasta – ACC – 4c. Documento Identidade - Órgão emissor / Identity Document - Issuing Authority / Documento de Identificación - Autoridad Expedidora – 4d. CPF – 5. Número de registro da CNH / Driver License Number / Número de Permiso de Conducir – 9. Categoria de Veículos da Carteira de Habilitação / Driver license Class / Categoría de Permisos de Conducir – Nacionalidade / Nationality / Nacionalidad – Filiação / Filiation / Filiación – 12. Observações / Observations / Observaciones - Local / Place / Lugar

I<BRA028969996<178<<<<<<<<<<<<
8502049M3212220BRA<<<<<<<<<<<8
DANIEL<<BERNS<<<<<<<<<<<<<<<<<<

QR-CODE

Documento assinado com certificado digital em conformidade com a Medida Provisória nº 2200-2/2001. Sua validade poderá ser confirmada por meio do programa Assinador Serpro.

As orientações para instalar o Assinador Serpro e realizar a validação do documento digital estão disponíveis em: https://www.serpro.gov.br/assinador-digital.

SERPRO / SENATRAN

MINISTÉRIO DA FAZENDA
Secretaria da Receita Federal do Brasil
Procuradoria-Geral da Fazenda Nacional

CERTIDÃO NEGATIVA DE DÉBITOS RELATIVOS AOS TRIBUTOS FEDERAIS E À DÍVIDA ATIVA DA UNIÃO

Nome: VALE AUTOMACAO INDUSTRIAL LTDA
CNPJ: 09.504.672/0001-09

Ressalvado o direito de a Fazenda Nacional cobrar e inscrever quaisquer dívidas de responsabilidade do sujeito passivo acima identificado que vierem a ser apuradas, é certificado que não constam pendências em seu nome, relativas a créditos tributários administrados pela Secretaria da Receita Federal do Brasil (RFB) e a inscrições em Dívida Ativa da União (DAU) junto à Procuradoria-Geral da Fazenda Nacional (PGFN).

Esta certidão é válida para o estabelecimento matriz e suas filiais e, no caso de ente federativo, para todos os órgãos e fundos públicos da administração direta a ele vinculados. Refere-se à situação do sujeito passivo no âmbito da RFB e da PGFN e abrange inclusive as contribuições sociais previstas nas alíneas 'a' a 'd' do parágrafo único do art. 11 da Lei nº 8.212, de 24 de julho de 1991.

A aceitação desta certidão está condicionada à verificação de sua autenticidade na Internet, nos endereços <http://rfb.gov.br> ou <http://www.pgfn.gov.br>.

Certidão emitida gratuitamente com base na Portaria Conjunta RFB/PGFN nº 1.751, de 2/10/2014.
Emitida às 11:23:04 do dia 09/12/2024 <hora e data de Brasília>.
Válida até 07/06/2025.
Código de controle da certidão: **D298.A310.068F.485B**
Qualquer rasura ou emenda invalidará este documento.

Voltar Imprimir

CAIXA ECONÔMICA FEDERAL

Certificado de Regularidade do FGTS - CRF

Inscrição: 09.504.672/0001-09

Razão Social: VALE AUTOMACAO INDUSTRIAL LTDA

Endereço: R GENERAL OSORIO 4584 / SALTO WEISSBACH / BLUMENAU / SC / 89032-240

A Caixa Econômica Federal, no uso da atribuição que lhe confere o Art. 7, da Lei 8.036, de 11 de maio de 1990, certifica que, nesta data, a empresa acima identificada encontra-se em situação regular perante o Fundo de Garantia do Tempo de Servico - FGTS.

O presente Certificado não servirá de prova contra cobrança de quaisquer débitos referentes a contribuições e/ou encargos devidos, decorrentes das obrigações com o FGTS.

Validade:04/05/2025 a 02/06/2025

Certificação Número: 2025050401291500002898

Informação obtida em 06/05/2025 15:50:25

A utilização deste Certificado para os fins previstos em Lei esta condicionada a verificação de autenticidade no site da Caixa: **www.caixa.gov.br**

Voltar Imprimir

CAIXA ECONÔMICA FEDERAL

Certificado de Regularidade do FGTS - CRF

Inscrição: 09.504.672/0001-09

Razão Social: VALE AUTOMACAO INDUSTRIAL LTDA

Endereço: R GENERAL OSORIO 4584 / SALTO WEISSBACH / BLUMENAU / SC / 89032-240

A Caixa Econômica Federal, no uso da atribuição que lhe confere o Art. 7, da Lei 8.036, de 11 de maio de 1990, certifica que, nesta data, a empresa acima identificada encontra-se em situação regular perante o Fundo de Garantia do Tempo de Servico - FGTS.

O presente Certificado não servirá de prova contra cobrança de quaisquer débitos referentes a contribuições e/ou encargos devidos, decorrentes das obrigações com o FGTS.

Validade:23/05/2025 a 21/06/2025

Certificação Número: 2025052307091500002857

Informação obtida em 30/05/2025 15:51:06

A utilização deste Certificado para os fins previstos em Lei esta condicionada a verificação de autenticidade no site da Caixa: **www.caixa.gov.br**

ESTADO DE SANTA CATARINA
SECRETARIA DE ESTADO DA FAZENDA

CERTIDÃO NEGATIVA DE DÉBITOS ESTADUAIS

Nome (razão social): **VALE AUTOMACAO INDUSTRIAL LTDA**
CNPJ/CPF: **09.504.672/0001-09**

Ressalvando o direito da Fazenda Estadual de inscrever e cobrar as dívidas que vierem a ser apuradas, é certificado que não constam, na presente data, pendências em nome do contribuinte acima identificado, relativas aos tributos, dívida ativa e demais débitos administrados pela Secretaria de Estado da Fazenda.

Dispositivo Legal:	**Lei nº 3938/66, Art. 154**
Número da certidão:	**240140383055602**
Data de emissão:	**05/12/2024 11:36:04**
Validade (Lei nº 3938/66, Art. 158):	**03/06/2025**

A autenticidade desta certidão deverá ser confirmada na página da Secretaria de Estado da Fazenda na Internet, no endereço: http://www.sef.sc.gov.br

Este documento foi assinado digitalmente
Impresso em: 30/05/2025 09:55:33

Assinado por SECRETARIA DE ESTADO DA FAZENDA - CNPJ: 82.951.310/0001-56 - Data/Hora: 30/05/2025

ESTADO DE SANTA CATARINA
SECRETARIA DE ESTADO DA FAZENDA

CERTIDÃO NEGATIVA DE DÉBITOS ESTADUAIS

Nome (razão social): **VALE AUTOMACAO INDUSTRIAL LTDA**
CNPJ/CPF: **09.504.672/0001-09**

Ressalvando o direito da Fazenda Estadual de inscrever e cobrar as dívidas que vierem a ser apuradas, é certificado que não constam, na presente data, pendências em nome do contribuinte acima identificado, relativas aos tributos, dívida ativa e demais débitos administrados pela Secretaria de Estado da Fazenda.

Dispositivo Legal:	**Lei nº 3938/66, Art. 154**
Número da certidão:	**250140003822368**
Data de emissão:	**05/01/2025 17:21:14**
Validade (Lei nº 3938/66, Art. 158):	**04/07/2025**

A autenticidade desta certidão deverá ser confirmada na página da Secretaria de Estado da Fazenda na Internet, no endereço: http://www.sef.sc.gov.br

Este documento foi assinado digitalmente
Impresso em: 15/01/2025 13:10:11

Assinado por SECRETARIA DE ESTADO DA FAZENDA - CNPJ: 82.951.310/0001-56 - Data/Hora: 15/01/2025

PREFEITURA DE BLUMENAU

Secretaria da Fazenda
Diretoria de Receita

Gerência de Cobrança

CERTIDÃO POSITIVA DE DÉBITO COM EFEITO DE NEGATIVA

Nome: VALE AUTOMACAO INDUSTRIAL LTDA - EPP
CPF/CNPJ: 09.504.672/0001-09
CMC: 83809
Endereço: GENERAL OSORIO 4584, GALPAO:16;FUNDOS:SALA 01, SALTO WEISSBACH, BLUMENAU - SC, CEP 89032-240

Para fins de LICITAÇÃO.

Certificamos, nos termos do Artigo 3º do Decreto N° 9.101 de 29/01/2010, que em nome e/ou endereço do contribuinte supra, consta a existência de débito, não vencido, a seguir relacionado(s).

Exercício: 2025 Tributo: ISS/TLL

A presente Certidão Positiva de Débito, com efeitos de Certidão Negativa de Débito, tem validade pelo prazo de 180 (Cento e oitenta) dias, contados da data de sua expedição. Esta certidão refere-se a débitos municipais. Ressalvado ao Município de Blumenau o direito de cobrar qualquer importância que venha a ser apurada.

Número de Certidão: 160919903258
Assinatura Digital: 305F534DC8E0DB7458D92D57B7142620
Data/Hora Emissão: 18/03/2025 10:08:32
Data Validade: 14/09/2025

Atenção: Qualquer rasura ou emenda invalidará este documento

A autenticidade desta certidão deverá ser confirmada no endereço http://www.blumenau.sc.gov.br/cidadao

PODER JUDICIÁRIO
JUSTIÇA DO TRABALHO

CERTIDÃO NEGATIVA DE DÉBITOS TRABALHISTAS

Nome: VALE AUTOMACAO INDUSTRIAL LTDA (MATRIZ E FILIAIS)
CNPJ: 09.504.672/0001-09
Certidão nº: 762029/2025
Expedição: 07/01/2025, às 01:40:47
Validade: 06/07/2025 - 180 (cento e oitenta) dias, contados da data de sua expedição.

Certifica-se que **VALE AUTOMACAO INDUSTRIAL LTDA (MATRIZ E FILIAIS)**, inscrito(a) no CNPJ sob o nº **09.504.672/0001-09**, **NÃO CONSTA** como inadimplente no Banco Nacional de Devedores Trabalhistas.
Certidão emitida com base nos arts. 642-A e 883-A da Consolidação das Leis do Trabalho, acrescentados pelas Leis ns.° 12.440/2011 e 13.467/2017, e no Ato 01/2022 da CGJT, de 21 de janeiro de 2022.
Os dados constantes desta Certidão são de responsabilidade dos Tribunais do Trabalho.
No caso de pessoa jurídica, a Certidão atesta a empresa em relação a todos os seus estabelecimentos, agências ou filiais.
A aceitação desta certidão condiciona-se à verificação de sua autenticidade no portal do Tribunal Superior do Trabalho na Internet (http://www.tst.jus.br).
Certidão emitida gratuitamente.

INFORMAÇÃO IMPORTANTE
Do Banco Nacional de Devedores Trabalhistas constam os dados necessários à identificação das pessoas naturais e jurídicas inadimplentes perante a Justiça do Trabalho quanto às obrigações estabelecidas em sentença condenatória transitada em julgado ou em acordos judiciais trabalhistas, inclusive no concernente aos recolhimentos previdenciários, a honorários, a custas, a emolumentos ou a recolhimentos determinados em lei; ou decorrentes de execução de acordos firmados perante o Ministério Público do Trabalho, Comissão de Conciliação Prévia ou demais títulos que, por disposição legal, contiver força executiva.

PODER JUDICIÁRIO
JUSTIÇA DO TRABALHO

CERTIDÃO NEGATIVA DE DÉBITOS TRABALHISTAS

Nome: VALE AUTOMACAO INDUSTRIAL LTDA (MATRIZ E FILIAIS)
CNPJ: 09.504.672/0001-09
Certidão nº: 29912010/2025
Expedição: 30/05/2025, às 09:53:31
Validade: 26/11/2025 - 180 (cento e oitenta) dias, contados da data de sua expedição.

Certifica-se que **VALE AUTOMACAO INDUSTRIAL LTDA (MATRIZ E FILIAIS)**, inscrito(a) no CNPJ sob o nº **09.504.672/0001-09**, **NÃO CONSTA** como inadimplente no Banco Nacional de Devedores Trabalhistas.
Certidão emitida com base nos arts. 642-A e 883-A da Consolidação das Leis do Trabalho, acrescentados pelas Leis ns.° 12.440/2011 e 13.467/2017, e no Ato 01/2022 da CGJT, de 21 de janeiro de 2022.
Os dados constantes desta Certidão são de responsabilidade dos Tribunais do Trabalho.
No caso de pessoa jurídica, a Certidão atesta a empresa em relação a todos os seus estabelecimentos, agências ou filiais.
A aceitação desta certidão condiciona-se à verificação de sua autenticidade no portal do Tribunal Superior do Trabalho na Internet (http://www.tst.jus.br).
Certidão emitida gratuitamente.

INFORMAÇÃO IMPORTANTE
Do Banco Nacional de Devedores Trabalhistas constam os dados necessários à identificação das pessoas naturais e jurídicas inadimplentes perante a Justiça do Trabalho quanto às obrigações estabelecidas em sentença condenatória transitada em julgado ou em acordos judiciais trabalhistas, inclusive no concernente aos recolhimentos previdenciários, a honorários, a custas, a emolumentos ou a recolhimentos determinados em lei; ou decorrentes de execução de acordos firmados perante o Ministério Público do Trabalho, Comissão de Conciliação Prévia ou demais títulos que, por disposição legal, contiver força executiva.

PODER JUDICIÁRIO
TRIBUNAL DE JUSTIÇA
de Santa Catarina

CERTIDÃO RECUPERAçãO JUDICIAL, EXTRAJUDICIAL E FALêNCIA Nº: 4148489
Comarcas e Turmas Recursais (Primeiro Grau)

CERTIFICAMOS, na forma da lei, que, consultando os sistemas processuais, **NÃO CONSTAM** em tramitação nas comarcas do Estado de Santa Catarina **AÇÕES FALIMENTARES EM GERAL** contra:

NOME: VALE AUTOMAÇÃO INDUSTRIAL LTDA
Raiz do CNPJ: 09.504.672
País endereço da sede : BRASIL
Estado endereço da sede : SANTA CATARINA
Município endereço da sede : BLUMENAU
Endereço da sede : RUA GENERAL OSORIO,4584 GALPAO 16

Certidão emitida às 15:53 de 10/04/2025.

a) Os dados que serviram de parâmetro para a realização da busca e para expedição desta certidão são de responsabilidade do(a) solicitante, inexistindo qualquer conexão com a Receita Federal ou outra instituição pública para autenticação das informações prestadas, competindo ao(à) interessado(a) ou destinatário(a) sua conferência.

b) Certidão expedida gratuitamente, nos termos da Resolução CNJ n. 121/2010 e Resolução Conjunta GP/CGJ n. 6/2023.

A confirmação de autenticidade desta certidão estará disponível pelo prazo de 90 dias, contados da emissão do documento, no endereço https://certidoes.tjsc.jus.br/download - Solicitado por: Jonathan Russi - CPF: ***.237.449-** gov.br Ouro

Ficha cadastral
Vale Automação Industrial

Matriz - Blumenau - SC

Vale Automação Industrial LTDA
CNPJ: 09.504672/0001-09
I.E. 256.515.581
Rua: General Osório, 4584 - Galpão 16 fundos - Sala 01
Bairro: Salto Weissbach - CEP: 89032-240
Blumenau - SC - Telefone: (47) 3285-9002

Escritório - Salvador - BA

Vale Automação Industrial LTDA
CNPJ: 09.504.672/0002-90
I.E. 182.412.642 - I.M. 814.621/001-16
Rua: Mundo, 121 - Sala 208 - Edificio Tecnovia
Bairro: Trobogy - CEP: 41745-715
Salavador - BA - Telefone: (71) 4042-2418

Escritório - Araucária - PR

Vale Automação Industrial LTDA
CNPJ: 09.504.672/0003-70
I.E. 90931674-03
Rua: - Av. das Araucárias, 521
Bairro: Barigui, Araucária - PR,
83707-642 - Telefone: (42) 3542-1846

Escritório - Caxias do Sul - RS

Vale Automação Industrial LTDA
CNPJ: 09.504.672/0004-51
I.E. 0290721652
Rua: Avenida Ruben Bento Alves, 4626, fundos, sala 01
Bairro Santa Catarina, Caxias do Sul/RS,
CEP: 95032-318 - Telefone: (51) 2042-0557

Escritório - Fortaleza - CE

Vale Automação Industrial LTDA
CNPJ: 09.504.672/0005-32
I.E.072549572
Rua: Av Padre Antonio Tomas, 2420, Sala 504,
Bairro Aldeota, Fortaleza/CE,
CEP: 60140-160 - Telefone: (85) 3514-0958

CD - Curitiba - PR

Vale Automação Industrial LTDA
CNPJ: 09.504.672/0007-02
IE: 91142893-85
Rua: Theodoro Locker, 821 – Barracão 12-B – Cond, CIC Norte
Bairro: Cidade Industrial Curitiba – Curitiba - PR
CEP: 81270-370 – Telefone (42) 3542-1846

CD - Cabo de Santo Agostinho - PE

Vale Automação Industrial LTDA
CNPJ: 09.504.672/0006-13
IE: 1243380-20
Rua: Av. Governador Miguel Arraes de Alencar, 1380 – GP3 M21 Sala1–Cond Log Class
Bairro: Ponte dos Carvalhos – Cabo de Santo Agostinho - PE
CEP: 54580-773 – (71) 4042-2418

Envio de NFe:
nfe@valeautomacao.com

Envio de NFSe:
nfse@valeautomacao.com

Contato financeiro:
financeiro@valeautomacao.com

Contas bancárias:

Banco do Brasil: 001
AG: 0095-7
C/C: 29236-2

Itau: 341
AG: 9247
C/C 98664-0

PIX: 09504672000109

Docusign Envelope ID: 385D20D1-2682-4F7E-927B-6EC46CDFCE16

Parceiro
Autorizado
Distribuidor Oficial

São Paulo, 19 de março de 2025

Declaramos que a VALE AUTOMACAO INDUSTRIAL LTDA, portador do CNPJ 09.504.672/0001-09, localizado no endereço R GENERAL OSORIO, 4584 – Blumenau (SC), é um distribuidor oficial da Schneider Electric Brasil e faz parte do nosso programa global de parceria de **Distribuição.**

Daniel Henrique Gatti
Gerente de Vendas Canal Distribuição.
Schneider Electric Brasil Ltda.

Signed by:
DANIEL HENRIQUE GATTI
F74389C932BC4FC...

Declaração válida até 31 de dezembro de 2025.

Life Is On | Schneider Electric

Catalog | September 2024

Altivar Soft Starter ATS480

Soft starters for process and infrastructures from 4 to 900 kW

www.se.com

Life Is On | Schneider Electric

Quick access to product information

Get technical information about your product

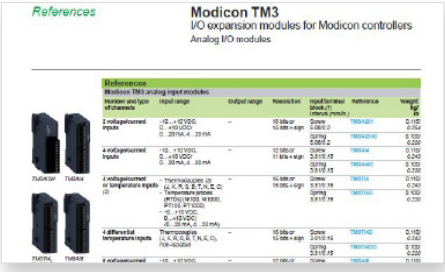

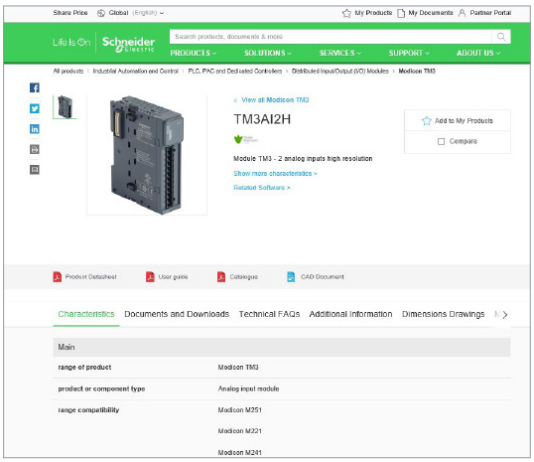

Each commercial reference presented in a catalog contains a hyperlink. Click on it to obtain the technical information of the product:

- Characteristics, Dimensions and drawings, Mounting and clearance, Connections and schemas, Performance curves
- Product image, Instruction sheet, User guide, Product certifications, End of life manual

Find your catalog

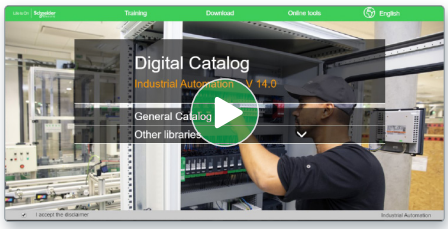

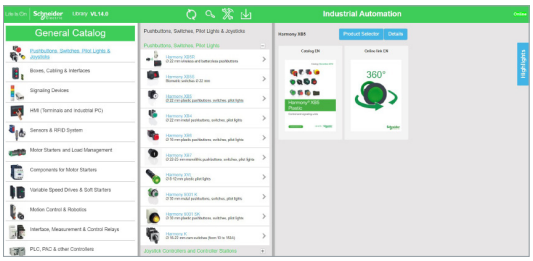

> With just 3 clicks, you can access the Industrial Automation and Control catalogs, in both English and French
> Consult digital automation catalogs at Digi-Cat Online

- Up-to-date catalogs
- Embedded product selectors, 360° pictures
- Optimized search by commercial references

Select your training

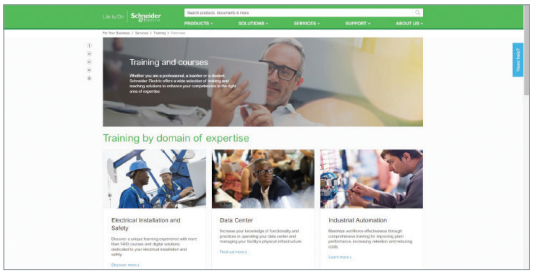

> Find the right Training for your needs on our Global website
> Locate the training center with the selector tool, using this link

Life Is On | Schneider Electric

mySchneider, your personalized digital experience

Access an all-in-one customized online experience and benefit from tailored business services, resources, and tools to efficiently support your business operations.

- **Efficiency:** In just a few clicks, find all the information and support you need to get the job done.
- **Simplicity:** Use a single login to access all business services, in one place, available 24/7. You no longer need to log in to multiple platforms.
- **Personalization:** Benefit from content, tools, and business services tailored to your activity, and customize your landing page based on your preferences.

Watch the How-to Videos

Order management

> Select Products and Add to Cart

> Check for Products' Price and Availability

> Order Products with Generic Commercial References

Product information

> Find a Product Data Sheet and Related Documents

> Select Products and Add to Cart

> Stay Up to Date on the Status of My Products

Support

> Get Quicker Answers Thanks to Online Support

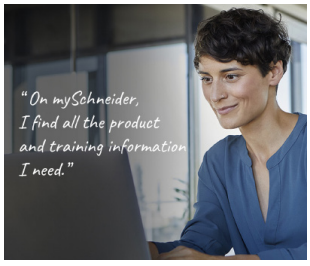

Training

> Access Trainings Dedicated to My Activity

Create your account

Life Is On | Schneider Electric

Digital tools to quickly select your soft starter solution

Product selector for ATS480

- Easy selection of the ATS480 commercial reference
- Expand it with options and accessories
- Get the Bill of Material in standard format
- Drop it into the product cart
- Access technical information and documentation

Scan or click on the QR code

EcoStruxure™ Motor Control Configurator

- From your application, select your soft starter reference
- Expand it with coordinated combination, options, and accessories
- Convert into Bill of Material, add the product to the cart
- Directly access product documentation
- Save, rework, share your solution with unique ID

Scan or click on the QR code

EcoStruxure™ Motor Management Design

- From your project, perform electrical design calculation
- Compare direct-on-line, soft starter, and variable speed drive
- Verify starting feasibility from mechanical standpoint
- Verify that power factor and harmonics levels objectives are met
- Build a complete Motor Management solution: circuit breakers, soft starters, drives, contactors, MCC panels, power quality monitoring
- Get a summary report with calculations and recommended offers

Scan or click on the QR code

Life Is On | Schneider Electric

Altivar

Discover Altivar

Variable speed drives and soft starters

Improve your energy efficiency and sustainability with Altivar variable speed drives and soft starters. Manage motor control applications up to 20 MW with products ranging from compact products to custom-engineered solutions. Our connected devices offer built-in intelligence to improve operational efficiency, availability, and functional safety in various application areas, such as industrial processes, machines, or buildings.

Explore our offer

- Altivar Process
- Altivar Machine
- Altivar Building
- Altivar Soft Starters

Life Is On | Schneider Electric

Green Premium™

Enhance sustainability with Altivar™ Soft Starter ATS480

Superior environmental performance thanks to upgradability and modernization solutions

Altivar™ Soft Starter ATS480 is **RoHS** and **REACH** compliant
- Transparent environment information
- Life Cycle Analysis, compliant with ISO 14025
- Circularity Profile

Altivar™ Soft Starter ATS480 brings key benefits to help you achieve superior upgradable performance by enhancing its embedded functionality and performance capabilities for both hardware and software. ATS480 also extends the service life of ATS48 equipment: ATS480 replaces ATS48 while keeping the same footprint, circuit breaker, contactors, cables, and behavior of the process, making way for evolution.

The additional power options and the cybersecurity-compliant firmware upgradability capabilities of the Altivar Soft Starter ATS480 can help you to maximize process continuity and operation, as well as reduce your operational expenses, by avoiding the need to replace your soft starter or modify your existing installation as a retrofit.

Benefits

- Enable a secure and digital area
- Reduce your engineering time and cost
- Help to secure your operations
- Reduce downtime
- Extend the service life of ATS48 equipment
- Make way for evolution
- Preserve your initial investment

...SUSTAINABILITY READY

Green Premium™ Sustainable performance, by design

Experience our offer on
se.com/green-premium

Communication and Wi-Fi modules

The additional communication modules allow you to easily integrate Altivar Soft Starter ATS480 in your scalable automation system. Together with the Wi-Fi access point, they bring easy access to the real data provided by the soft starter, aiding its digitization and easy integration in Industry 4.0 technologies.

Cybersecurity-compliant firmware upgrade

You have the possibility to upgrade the Altivar Soft Starter ATS480 firmware. Available on se.com, the firmware is digitally signed and can only be applied if authenticity is verified by the ATS480.

Graphic display terminal and dynamic QR code

In addition to the detailed warnings and detected errors available on the removable plain text display terminal, the graphic display terminal provides contextual troubleshooting and direct access to the appropriate page of the documentation via a dynamic QR code.

Power options (line chokes, bypass contactor)

The power options of Altivar Soft Starter ATS480 bring you the possibility to improve the power quality and efficiency of your installation. These options also improve the continuity of service of the installation and its robustness.

Contents

Altivar Soft Starter ATS480

Altivar Soft Starter selection guide . . . . . *page 4*

- **General presentation** ..... *page 6*
- **Altivar Soft Starter presentation** ..... *page 8*
- **Selection criteria**
  - From an ATS48 commercial reference ..... *page 13*
  - Selection criteria for Altivar Soft Starter ATS480 ..... *page 13*
  - Normal and heavy duty applications ..... *page 14*
  - Selection of ATS480 commercial reference ..... *page 15*
  - Special uses ..... *page 16*
- **Soft starter references**
  - Connection in-line, not bypassed, motor power in kW ..... *page 18*
  - Connection inside delta, not bypassed, motor power in kW ..... *page 19*
  - Connection in-line, not bypassed, motor power in HP ..... *page 20*
  - Replacement parts ..... *page 21*
- **Configuration and runtime tools**
  - Plain text display terminal and accessories ..... *page 22*
  - Graphic display terminal and accessories ..... *page 24*
  - DTM and SoMove software ..... *page 26*
- **Options**
  - Soft starter/option combinations ..... *page 27*
  - Communication buses and networks ..... *page 28*
- **Firmware update** ..... *page 32*
  - Line chokes ..... *page 33*
  - Protective covers ..... *page 34*
- **Motor starter combinations**
  - Presentation ..... *page 35*
  - Type 1 coordination ..... *page 36*
  - Type 2 coordination ..... *page 40*
  - Line contactor reference table ..... *page 44*
- **Dimensions**
  - Soft starters ..... *page 45*
  - Line chokes ..... *page 46*

Services

- **A whole world of services for your drives** ..... *page 47*

Index

- **Product reference index** ..... *page 49*

EcoStruxure™
Innovation At Every Level

Schneider Electric's IoT-enabled, plug-and-play, open, secure, interoperable architecture and platform, in Industries, Infrastructures, Data Centers, and Buildings.

Innovation at every level

EcoStruxure is based on a three-tiered technology stack delivering innovation at every level, from connected products to edge control and apps, analytics, and services.

Together with our hybrid segments approach, this enhances your value around safety, reliability, operational efficiency, sustainability, and connectivity across 6 domains of expertise:

- Power
- IT
- Building
- Machine
- Plant
- Grid

Dedicated architectures and IoT

We tailor our solutions in the form of dedicated reference architectures for plants:

- Management systems
- Power systems
- Data center systems
- Industrial plant and machine systems
- Smart grid systems

The Industrial Internet of Things (IIoT) gives an additional boost to technologies. That's why we provide our customers with an IoT-enabled architecture and platform offering simple, reliable, productive, and cost-efficient solutions.

Cybersecurity solutions

Robust cybersecurity protection is a must, and Schneider Electric's solutions can deliver it, regardless of business type or industry.

The vendor-agnostic services provided by our skilled professionals help to protect your entire critical infrastructure. We help to assess your risk, implement cyber-specific solutions, and maintain your onsite defenses over time, while integrating appropriate IT policies and requirements.

This is our difference and your advantage.

Enhanced safety

With the release of M580 Safety, Schneider Electric further expands the EcoStruxure platform.

This consolidates our position as one of the most trusted industrial safety vendor, with thousands of Modicon and Triconex safety systems protecting the most critical industrial processes globally.

EcoStruxure™ Innovation At Every Level for Industry

*The Schneider Electric industrial software business and AVEVA have merged to trade as AVEVA Group plc, a UK listed company. The Schneider Electric and Life is On trademarks are owned by Schneider Electric and are being licensed to AVEVA by Schneider Electric.

Altivar Soft Starter

Soft starters for asynchronous motors

Altivar Soft Starter ranges

Market segments		**Simple machines**			**Industrial machines**		**Process and infrastructures, demanding machines**
Applications		**Simple starting**	**Simple starting and stopping**		**Simple starting and stopping for pumps and fans**		**Controlled starting and stopping for pumps, fans, compressors, mixers, crushers, conveyors**
Operational voltage range Ue (V)		**110…480**	**200…480**	**200…480**	**230…440**	**208…600**	**208…690**
Operational current range Ie (A)		**3…25**	**6…32**	**38…105**	**17…590**	**17…590**	**17…1,200**
Power range	**For 50…60 Hz line supply (kW/*HP*)**	**0.37…11/*0.5…15***	**0.75…15/*1…20***	**11…55/*10…75***	**4…355**	**4…400/*3…500***	**4…900/*3…1,200***
	Single-phase 110…230 V (kW)	0.37…2.2	–				
	Three-phase 200…240 V (kW/*HP*)	–	0.75…7.5/*1…10*	–			
	200…480 V (kW/*HP*)	0.37…11/*0.5…15*	–				
	200 V (*HP*)	–		10…30	–		
	208 V (*HP*)	–		10…30	–	*3…150*	*3…400*
	230…240 V (kW/*HP*)	–		11…30/*10…40*	4…160/–	4…160/*5…200*	4…355/*5…450*
	380…440 V (kW)	1.1…11	1.5…15	18.5…55	7.5…355	7.5…355	7.5…710
	460…480 V (*HP*)	*0.5…15*	*2…20*	*25…75*	–	*10…400*	*10…1,000*
	500…525 V (kW)	–				9…400	9…800
	575 V (*HP*)	–				*15…500*	*15…1,200*
	660…690 V (kW)	–					11…900
Motor control	Operating cycle	–			Normal duty		Normal duty and heavy duty
	Current limiting	–			350% current rating		500% current rating (700% rated motor current)
	Boost	–	Yes				Yes
	Type of control	Configurable voltage ramp					Torque control (TCS = torque control system), voltage control
	Deceleration	–	Voltage ramp				Torque ramp
	Braking	–					Yes
	Number of controlled phases	1	2		3		
	Connection inside the delta	–			Yes	–	Yes
	Bypass	Integrated					External with soft starter optimization or without bypass
Functions	Motor overload monitoring	External			Electronic embedded, or with PTC		Electronic embedded, with PTC, or with PT100 2- or 3-wire probes
	Other monitoring	–		Soft starter overheating	Underload, overload, motor phase loss, line phase inversion, excessive acceleration time, current overload, ground leakage		Underload, overload, motor phase loss, line phase inversion, overcurrent, excessive acceleration time, current overload, ground leakage
	Pre-heating	–					Yes
	Smoke extraction	–					Yes
	Multi-motor cascade	–					Yes
	Second motor set	–			Yes		
Communication	Embedded	–			Modbus serial link		
	Option modules	–					Modbus TCP, EtherNet/IP, PROFIBUS DP V1, CANopen daisy chain, SUB-D, and screw terminal block
Communication and runtime tools		2 potentiometers	3 potentiometers		7-segment display, SoMove software		Plain text display terminal, graphic display terminal (option), DTM (device type manager), SoMove software
Number of I/O	Analog inputs	–			1 PTC probe		PTC or PT100 2- or 3-wire probe
	Digital inputs	–	3				4
	Analog outputs	–					1
	Digital outputs	–	1		–		2
	Relay outputs	–	1		2		3
Standards and certifications		IEC/EN 60947-4-2 CE, UL, CSA, C-Tick, CCC		IEC/EN 60947-4-2 CE, CCC, UKCA, RCM, EAC, REACH, RoHs	IEC/EN 60947-4-2, EMC class A CE, UL, CSA, C-Tick, GOST, CCC		IEC/EN 60947-4-2, EMC class A and B CE, cULus, UKCA, CCC, RCM, EAC, DNV, ABS, BV, CCS, REACH, RoHs
References		**ATS01N1●●●●**	**ATS01N2●●●●**	**ATS130N2●●●LT**	**ATS22●●●Q**	**ATS22●●●S6●**	**ATS480●●●Y**

More technical information on www.se.com

Altivar Soft Starter ATS480

Soft starters for asynchronous motors

Reduce engineering time, help to secure operations

Altivar Soft Starter ATS480 range

Enables a secure and digital area

Altivar Soft Starter ATS480 is the new range of soft starters from Schneider Electric designed to digitize the entire life cycle. Powered digitally by EcoStruxure, ATS480 increases efficiency from selection to maintenance.

Altivar Soft Starter ATS480 had been designed to:

- Respect cybersecurity requirements and usages according to the IEC 62443 standard
- Meet the requirements of the most stringent applications in normal and heavy duty
- Cover the operational voltage range from 208 to 690 V in a single product range up to 1200 A

Extending the service life of ATS48 equipment

Easy replacement of ATS48 by ATS480

> Same footprint and fixings
> Same I/O
> Same parameters
> Same application behavior
> Keep the same devices, such as circuit breaker and contactors
> Transfer an ATS48 configuration to the ATS480 using SoMove Converter

Make way for evolution

> Connection to the main fieldbuses on the market
  - Modbus TCP
  - EtherNet/IP
  - CANopen
  - PROFIBUS DP
  - Modbus serial

> Firmware update of the product and options
  - Single update: point-to-point
  - Mass update: multi-point

> Reinforced robustness
  - Conformal coating of printed circuit board
  - Compliance with IEC/EN 60721-3-3 Class 3C3
  - Combination with TeSys Deca and Giga

Reducing engineering time and cost

With EcoStruxure tools, integrated automation system, and ATS480 Device Type Manager, the engineering time is drastically reduced all along the process from selection to project execution.

> It takes just two minutes to select the complete soft starter solution with EcoStruxure Motor Control Configurator: no need to be an expert

> Optimization of the power architecture with EcoStruxure Motor Management Design
  - Analysis of different solutions
  - Selection of the preferred devices according to the architecture

> Definition of the architecture and detailed design with EcoStruxure Plant Builder including the Bill of Material and quotation

> With ATS480 DTM, associated derived function block (DFB), and faceplate:
  - Quickly write the PLC program in EcoStruxure Control Expert
  - Integrate ready-to-use faceplate in AVEVA System Platform
  - Adapt and modify parameters without stopping the installation
  - Set, monitor, and diagnose from the engineering station
  - DFB and faceplate available in General Purpose libraries

> Mass firmware update with EcoStruxure Automation Device Maintenance

EcoStruxure™
Innovation At Every Level

Altivar Soft Starter ATS480

Soft starters for asynchronous motors
Reduce engineering time, help to secure operations

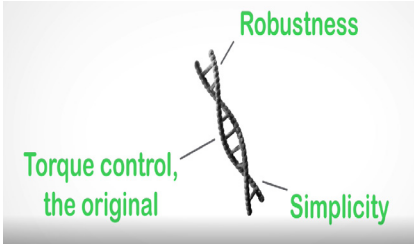

Helping to secure operations

The worthy successor of ATS48

Altivar Soft Starter ATS480 has inherited the best of ATS48 recognized and proven attributes:

- Torque control, the original: Pioneer of the torque control system (TCS), the Schneider Electric algorithm has been copied by major manufacturers but is still at the leading edge
- Robustness: In terms of starting capabilities, even in the most demanding applications
- Simplicity: Just set a few parameters displayed in plain text in your language and you are ready to start
- Asset monitoring:
  - Monitoring of the motor with internal electronic thermal relay, PTC, or PT100 probe
  - Monitoring of the mechanics and hydraulics with control of acceleration and deceleration
  - Monitoring of the main supply and others loads connected by reducing the voltage drop during starting

Increased continuity of service

- Bypass according to AC3 for full back-up solution
- No downtime in case of contactor failure: ATS480 thryristors are able to supply the motor during the start and stop phase, but also during steady state operations at the rated speed
- Fast replacement of standard contactor by maintenance technician: no need for complete disassembly of the soft starter to replace an internal contactor

Cybersecurity best practices

- User account management that includes user authentication, authorization according to the access channels, and strong passwords
- Hardening to restrict ports, functions, or services
- Threat intelligence to manage cybersecurity-related events
- Cybersecurity-compliant firmware upgrade

Embedded troubleshooting and digital support

- Easy root cause identification of warnings and detected errors
- Embedded test routine when connected inside motor delta
- Direct access to error page of documentation thanks to dynamic QR code
- QR code to documentation on the front of the ATS480

Superior sustainability

Altivar Soft Starter ATS480 is a Green Premium product designed to take account of environmental considerations. With the Schneider Electric Green Premium ecolabel, ATS480 meets the following requirements:

- Use of hazardous substances
  - Compliance with the European RoHS directive (2011/65/EU and 2015/863/EU) and RoHS China
  - Compliance with REACH regulation No.1907/2006 for the declaration of substances of very high concern (SVHC), authorization (Annex XIV), and restriction (Annex XVII)
  - In terms of restrictions, Green Premium goes beyond current directives and regulations
- Environmental impact
  The Product Environmental Profile (PEP) is a quantitative Type III Environmental Declaration in compliance with ISO 14025 that ensures appropriate reliability and transparency. Based on a Life Cycle Assessment (LCA) of the product along its whole life cycle, the document presents the different impacts such as energy consumption, carbon footprint, consumption of raw materials, and pollution of air, water, and soil.
- End-of-Life management
  The “ATS480 End-of-life” information document in accordance with IEC 62635 guidance contains the instructions for a responsible disposal of the products and maximizes recycling in a step towards a more circular economy, improving operational efficiency and reducing environmental hazards.
- Upgradeability
  Altivar Soft Starter ATS480 can be upgraded with additional power options or firmware.

Altivar Soft Starter ATS480

Soft starters for asynchronous motors

Process, infrastructures, and industrial machines

Altivar Soft Starter ATS480 is specifically designed to meet the requirements of the following market segments:

- Water and wastewater
- Oil and gas
- Mining, minerals, and metals
- Food and beverage
- Marine

ATS480 also meets the needs of industrial machines.

The Altivar Soft Starter ATS480 range increases availability, helps to ensure continuous operations, and reduces downtime thanks to its:

- Torque control
- Simplicity
- Connectivity
- Communication services
- Robustness

Applications

The Altivar Soft Starter ATS480 helps to secure soft starting and stopping even for the most demanding applications, while reducing mechanical wear and fluid shocks in hydraulic applications.

ATS480 features include:

- Sized for normal duty and heavy duty applications
- Controlled acceleration thanks to TCS, the original torque control system
- Controlled deceleration thanks to TCS, the original torque control system
- Efficient dynamic braking and DC injection down to zero speed to stop large inertia application
- Up to 700% motor current starting without tripping
- Boost function to override locked shaft, friction
- Smoke extraction
- Cascade

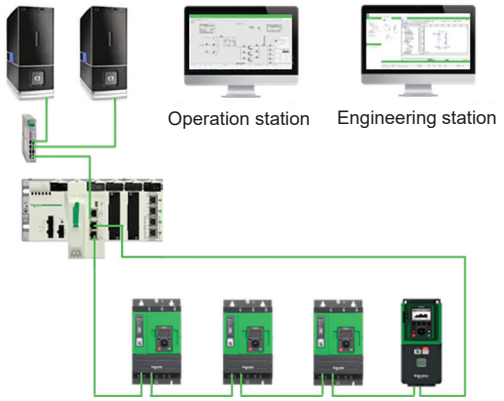

EcoStruxure Plant integration

The association of Altivar Soft Starter ATS480 with Schneider Electric automation control systems like EcoStruxure Process Expert (for hybrid systems) offers a high-performance, global automation and motor control solution with optimized total cost of ownership (TCO).

The solution provides operational integrity for people, processes, and assets, with improved maintenance support to help reduce downtime and ensure operation continuity.

It offers operational insight by accessing more information to optimize the process. Based on market standards (FDT/DTM, Ethernet, etc.), it is a sustainable, scalable solution that enables processes to be adapted easily and affordably.

An integrated automation system powered by EcoStruxure offers the following benefits:

- More efficient projects
- Optimized operations

Altivar Soft Starter ATS480

Soft starters for asynchronous motors

The offer

The Altivar Soft Starter ATS480 is a controller with six thyristors using the TCS (torque control system) algorithm to control acceleration, deceleration, and stopping of three-phase squirrel cage asynchronous motors up to 900 kW.

- The ATS480 is a cost-effective solution designed to:
  - Reduce machine operating costs by reducing mechanical stress and improving machine availability
  - Reduce the risk of severe damage by reducing fluid shocks and improving installation availability
  - Reduce the stress on the electrical distribution system by reducing line current peaks and voltage drops during motor starts

Altivar Soft Starter ATS480 consists of one range only covering:
- Operational voltage from 208 to 690 V
- Operational current from 17 to 1200 A

ATS480 integrates Modbus serial line communication protocols as standard. Each device is equipped with two RJ45 ports for:
- Connection to configuration and firmware update software
- Connection of the plain text display terminal or graphic display terminal
- Connection to a Modbus fieldbus

In addition, the ATS480 is equipped with one slot for a communication module: Modbus TCP, EtherNet/IP, CANopen, and PROFIBUS DP.

Robust

The Altivar Soft Starter ATS480 is designed to adapt to the harshest environments.
- Ambient operating temperature:
  - -10…+40 °C/*+14…104 °F* without derating, up to 60 °C/*140 °F* with derating of 2% per °C above 40 °C/*104 °F*
  - -10…+50 °C/*+14…122 °F* without derating when bypassed, up to 60 °C/*140 °F* with derating of 2% per °C above 50 °C/*122 °F*
- Relative humidity without condensing: 5…95%
- Storage and transport temperature: -40…+70 °C/*-40…+158 °F*
- Withstand to harsh environments:
  - Chemical class 3C3 conforming to IEC/EN 60721-3-3
  - Mechanical class 3S3 conforming to IEC/EN 60721-3-3
  - Printed circuit boards with protective coating
- Operating altitude:
  - 0…1,000 m/*0…3,281 ft* without derating
  - 1,000…4,000 m/*3,281…13,124 ft* with derating of 1% per 100 m/*328 ft*
  - Altitude also has an impact on the overvoltage category of the supply source (see “System earthing arrangement and mains voltage” section below)

System earthing arrangement and mains voltage

To comply with IEC 60947-1, the system earthing arrangement, mains voltage used on the ATS480, and the altitude define the overvoltage category of the supply source.

Mains voltage	System earthing arrangement	Supply source overvoltage category required according to altitude	
		Up to 2,000 m/*6,562 ft*	From 2,000 m/*6,562 ft* to 4,000 m/*13,124 ft*
208…480 V	TT or TN	OVCIII	OVCIII
	IT or corner grounded	OVCIII	OVCII
480…600 V	TT or TN	OVCIII	OVCII
	IT or corner grounded	OVCIII	OVCII
600…690 V	TT or TN	OVCIII	OVCII
	IT or corner grounded	OVCII	–

The supply source overvoltage category could be reduced by using an appropriate system such an insulation transformer.

Altivar Soft Starter ATS480 equipped with optional protective covers

The offer (continued)

Installation

ATS480 is intended to be mounted in a cabinet. The protection rating of the products is as follows:

- IP20 for current rating from 17 to 110 A
- IP00 for current rating from 140 to 1200 A

The units from 140 to 1200 A have unprotected power terminals. For units from 140 to 660 A, these terminals can be fitted with protective covers (see page 34). The protective covers are to be used with eyelet connections.

Electromagnetic compatibility (EMC)

Compliance with electromagnetic compatibility requirements has been incorporated into the design of the Altivar Soft Starter ATS480 to ensure equipment meets CE marking requirements.

Radiated and conducted emissions according to:

- IEC 60947-4-2 class A on all ATS480 ratings
- IEC 60947-4-2 class B from 17 to 170 A ratings (ATS480 must be bypassed at the end of starting)

Certifications

The Altivar Soft Starter ATS480 range has the following certifications: cULus, CE, UKCA, CCC, RCM, EAC, DNV, ABS, BV, CCS, REACH, RoHs Europe, RoHs China, PEP ecopassport

Marking: CE, cULus, CCC, EAC, RCM, UKCA, Green Premium

Integrated functions

The Altivar Soft Starter ATS480 includes numerous functions related to monitoring, the application, and start/stop performance, including:

- TCS, the original torque control system: constant control of the torque supplied to the motor during acceleration and deceleration phases (significantly reducing pressure surges)
- Dynamic braking
- Bypassing the soft starter using a contactor at the end of the starting phase whilst maintaining electronic monitoring (bypass function)
- Wide frequency tolerance for generator set power supplies
- Connecting the soft starter inside the motor delta

Application monitoring

- Built-in motor thermal monitoring
- Connection of PTC probes
- Connection of PT100 probes
- Monitoring of the time before restart
- Phase rotation
- Phase loss
- Mains loss
- Excessive starting time locked rotor

Application functions

- Monitoring of underloads and overcurrents during continuous operation
- Smoke extraction
- Main phase inversion
- Boost
- Torque limitation
- Second set of motor parameters
- Motor preheating function
- Warnings
- Forced local mode
- Automatic restart
- Cascade

Altivar Soft Starter ATS480

Soft starters for asynchronous motors

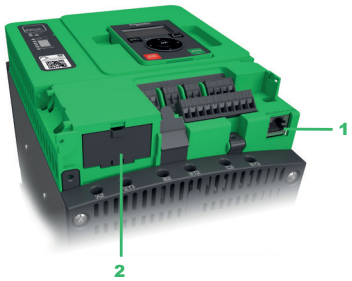

Modbus serial link and slot for the communication module

Integration

Fieldbus protocol

- ■ Modbus serial link (embedded) **1**
- □ Standard Modbus
- □ Connection of configuration and runtime tools
- □ Control of the Altivar Soft Starter ATS480 in automation architectures (PLCs, IPCs, HMIs, etc.) in industrial network protocols for reading/writing data:
  - Diagnostics, supervision, and fieldbus management functions
- ■ The following communication modules are available as an option **2**:
- □ Modbus TCP, EtherNet/IP and its services
  - SNMP, SNTP, BOOTP & DHCP, IP V6, cybersecurity services, FDR
  - Open Ethernet topologies
  - Embedded WebServer
- □ CANopen
- □ PROFIBUS DP

Integration of configuration and runtime tool

- ■ FDT/DTM technology within EcoStruxure Control Expert (see page 26)
- □ ATS480 configuration
- □ Diagnostics
- □ Control
- □ Monitoring

Dialog and configuration tools

- ■ Display terminal
- □ Plain text display terminal delivered as standard mounted on product front face (can be door mounted with IP43 degree of protection using an accessory) for:
  - ATS480 control, adjustment, and configuration
  - Display of current values (motor, I/O, etc.)
  - Diagnostics
  - Configuration storage and download
  - Duplication of the configuration in ATS480
- □ Graphic display terminal as separate option for product front face mounting or IP65 door mounting used for:
  - Duplication of an ATS480 configuration of one powered-up ATS480 on another powered-up ATS480
  - Copying configurations from a PC or ATS480 in the graphic display terminal and duplicating them on other ATS480 (the soft starter must be powered on for the duration of the duplication operations)
  - Connection to several drives using multidrop link components
  - ATS480 control, adjustment, and configuration
  - Diagnostics
  - Display of current values (motor, I/O, etc.)
  - Configuration storage and download
  - Access to digital portal via dynamic QR code

Graphic display terminal VW3A1111

- ■ Web server with Modbus TCP, EtherNet/IP communication module
- □ Easily accessible from any PC, iPhone, iPad, Android system, and major web browsers through the WIFER (Wifi dongle)
- □ Network diagnostics in real time
- □ Read/write values

- ■ SoMove software
- □ Advanced functions for configuration, setup, and maintenance of Altivar Soft Starter ATS480

SoMove software

Cybersecurity for your assets

Cybersecurity

Cybersecurity best practices embedded in Altivar Soft Starter ATS480 help to protect the installation against casual or coincidental violations coming from insiders such as well-intentioned and careless employees or contractors with no cybersecurity attack skills: this represents 60% of cyberattacks.

Cybersecurity features help to:

- ■ Enforce authorization of users through:
  - □ User authentication
  - □ Administrator override capability for user authorizations
  - □ Strong passwords
  - □ Passwords encrypted in a non-reversible way
  - □ Authorization managed according to channels
- ■ Restrict and disable functions or services:
  - □ Sign-in required after a configurable period of inactivity
  - □ Prohibited or restricted use of ports, protocols
  - □ Enabled/disabled services: e.g. SNMP service
- ■ Generate security-related reports:
  - □ Cybersecurity events recorded in dedicated database
  - □ Reports include user's name, type of operation, time stamp
  - □ Warning when storage capacity is approaching
  - □ Storage capacity up to 500 logins
  - □ 10 years' battery lifetime, warning when low battery is approaching
- ■ Protect authenticity of the firmware through:
  - □ Digitally-signed firmware
  - □ Cryptographic firmware keys
  - □ Original firmware stored in secure location
  - □ Ensuring that valid firmware is used at each power-up

The cybersecurity settings can be exported as an individual file to be saved and shared with different devices.

Scanning the QR code from a smartphone or tablet

Services

Altivar Soft Starter ATS480 features integrated services to achieve optimum time savings:

- ■ Native simplicity to set-up and start
- ■ Simplified communication with Modbus TCP, EtherNET/IP communication module: Ethernet port with embedded web server
- ■ Cybersecurity-compliant firmware update:
  - □ Firmware version available on se.com from Altivar Soft Starter ATS480 web page
  - □ Single device firmware update using SoMove
  - □ Mass firmware deployment using EcoStruxure Automation Device Maintenance
  - □ Applying the new firmware can be automatic or on order
  - □ Firmware update is available on ATS480 products, communication modules, and display terminal languages
- ■ Three QR codes:
  - Access to the digital customer portal: product data sheet, ATS480 ID card, Customer Care Center application
  - Direct access to description of the functions with optional graphic display
  - QR code generated in the event of a detected error (red screen) with optional graphic display terminal: identification of the detected error, probable causes, and remedies

Altivar Soft Starter ATS480

Soft starters for asynchronous motors

Selection from ATS48 commercial reference, selection criteria

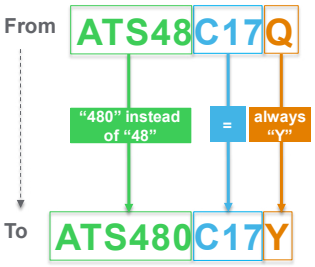

From an ATS48 commercial reference

ATS48 and ATS480 have the same commercial reference structure:

- The product range e.g. ATS48
- The current rating e.g. C17
- The voltage e.g. Q (Q for 230/415 V or Y for 208/690 V)

To select the ATS480 commercial reference corresponding to the ATS48 reference:
1 – Replace the ATS48 product range with ATS480
2 – Keep the same rating
3 – Always put Y to represent the operational voltage

Examples:

- ATS48M12Q becomes ATS480M12Y
- ATS48D62Y becomes ATS480D62Y

***Note**: ATS48 and ATS480 control supply voltage may differ, check the value in the installation guide before starting the system.*

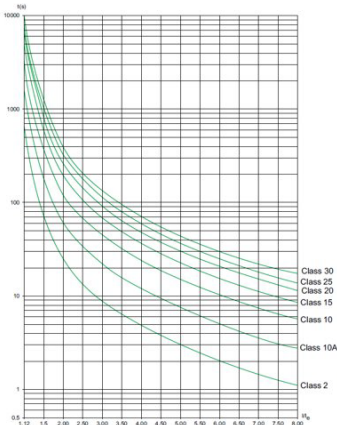

Motor thermal protection curves (from cold state)

Selection criteria for Altivar Soft Starter ATS480

- The mains voltage
- The rated motor power and rated motor current
- The type of application: normal duty or heavy duty

Select normal duty or heavy duty application

Examples of normal duty and heavy duty applications are given on page 14.
Normal duty and heavy duty are differentiated by the required overload that is defined by the following:

- Service duty: continuous or intermittent
- Service factor
- Overcurrent value
- Overcurrent duration

Motor service duty S1

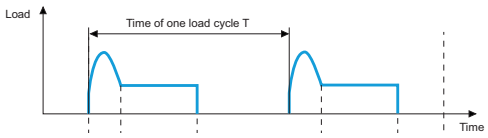

Motor service duty S4

From an application standpoint, the overload is defined depending on the service duty of the motor - S1 (continuous operation) or S4 (intermittent operation) - according to the following table:

Service type	Overload (starting)		Service cycle	
	Overcurrent	Duration	No. of starts/h	Conduction
Normal duty				
S1	4 x In 3 x In	23 s 46 s	Continuous operations after starting	
S4	4 x In 3 x In	12 s 23 s	10	50%
Heavy duty				
S1	4 x In 3 x In	48 s 90 s	Continuous operations after starting	
S4	4 x In	25 s	5	50%

Each application duty has a corresponding motor protection class:

- Normal duty -> motor thermal protection class 10E
- Heavy duty -> motor thermal protection class 20E

Normal and heavy duty applications

Depending on the type of machine, the applications are categorized as normal duty or heavy duty based on the starting characteristics, which are given as examples only in the table below.

Type of machine	Application	Functions performed by the Altivar Soft Starter ATS480	Starting current (% In)	Starting time (s)
Centrifugal pump	Normal duty	Deceleration (reduction in pressure surges) Detection of underload or reversal of phase rotation direction	300	5 to 15
Piston pump	Normal duty	Control of pump priming and direction of rotation	350	5 to 10
Fan	Normal duty Heavy duty if > 30 s	Detection of overloads caused by clogging or underloads (motor/fan transmission broken) Braking torque on stopping	300	10 to 40
Cold compressor	Normal duty	Monitoring, even for special motors	300	5 to 10
Screw compressor	Normal duty	Detection of reversal of phase rotation direction Contact for automatic draining on stopping	300	3 to 20
Centrifugal compressor	Normal duty Heavy duty if > 30 s	Detection of reversal of phase rotation direction Contact for automatic draining on stopping	350	10 to 40
Piston compressor	Normal duty	Detection of reversal of phase rotation direction Contact for automatic draining on stopping	350	5 to 10
Conveyor, transporter	Normal duty	Monitoring of overloads for incident detection or underloads for break detection	300	3 to 10
Lifting screw	Normal duty	Monitoring of overloads for hard spot detection or underloads for break detection	300	3 to 10
Drag lift	Normal duty	Monitoring of overloads for jamming detection or underloads for break detection	400	2 to 10
Lift	Normal duty	Monitoring of overloads for jamming detection or underloads for break detection Constant starting with variable load	350	5 to 10
Circular saw, band saw	Normal duty Heavy duty if > 30 s	Braking for fast stop	300	10 to 60
Pulper, butchery cutter	Heavy duty	Torque control on starting	400	3 to 10
Agitator	Normal duty	The current display indicates the density of the material	350	5 to 20
Mixer	Normal duty	The current display indicates the density of the material	350	5 to 10
Grinder	Heavy duty	Braking to limit vibrations during stopping, monitoring of overloads for jamming detection	450	5 to 60
Crusher	Heavy duty	Braking to limit vibrations during stopping, monitoring of overloads for jamming detection	400	10 to 40
Refiner	Normal duty	Torque control on starting and stopping	300	5 to 30
Press	Heavy duty	Braking to increase the number of cycles	400	20 to 60

Altivar Soft Starter ATS480

Soft starters for asynchronous motors

Selection of ATS480 commercial reference

Selection of ATS480 commercial reference

Once the appropriate application has been selected from the previous page, select the Altivar Soft Starter ATS480 from page 18 according to the supply voltage and the motor power. Check that the rated motor current is lower than the operational current of the ATS480.
The Altivar Soft Starter ATS480 is designed to respect the operations shown in the table in the "Select normal duty or heavy duty application" section on page 13 without triggering an overheat error and without bypass at 40 °C/*104 °F* max. and at an altitude of 1,000 m/*3,280 ft*. Above those limits it is necessary to derate the operational current of the soft starter as follows:

- derating of 2% per °C above 40 °C/*104 °F* up to 60 °C/*140 °F*
- derating of 1% per 100 m/*328 ft* up to 4,000 m/*13,124 ft*

Breakdown of ATS480 product reference

ATS 480 D 32 Y

Product range
ATS Altivar Soft Starter

Type
480

Factor for current rating
D Current x 1
C Current x 10
M Current x 100

Current multiplicand
10-11-12-……..66-75-79-88

Mains voltage
Y 208 to 690 VAC ;

For example, for the reference ATS480C17Y, the current rating is 170 A (17 x 10). The current rating is defined as the rated operational current in normal duty, in-line, not bypassed at 40 °C/*104 °F*.

Optimizing the selection when bypassed

When bypassed, the Altivar Soft Starter ATS480 rating selection can be optimized.

The thyristors were chosen not only to supply the motor during starting and stopping but also during steady state operations. However, the soft starter can be bypassed by a contactor at the end of starting (to limit the heat dissipated by the soft starter). The bypass contactor is controlled by the soft starter: the current measurements and monitoring mechanisms remain active when the soft starter is bypassed.

When bypassed, the ATS480 can supply a higher power motor.
Example of an 11 kW motor at 400 V:

- In normal duty:
  - Select ATS480D22Y if not bypassed
  - Select ATS480D17Y if bypassed and check that the current limiting is in accordance with the starting requirement
- In heavy duty:
  - Select ATS480D32Y if not bypassed
  - Select ATS480D22Y if bypassed and check that the current limiting is in accordance with the starting requirement

Special uses

Other use cases that influence the selection of the Altivar Soft Starter ATS480:

Connection inside the delta of the motor

In addition to the most frequently encountered wiring layouts, where the soft starter is installed in the line supply of the motor and the motor is connected in star or delta configuration, the ATS480 can be wired to the motor delta terminal in series with each winding (see the application diagram below). The soft starter current is lower than the line current absorbed by the motor by a ratio of √3. This type of installation enables a soft starter with a lower rating to be used.

Example: For a 400 V/110 kW motor with a line current of 195 A (current indicated on the motor nameplate for the delta connection), the current in each winding is equal to 195/√3, i.e. 114 A.

Select the soft starter rating with a maximum permanent rated current just above this current, i.e. 140 A (ATS 48C14Y for a normal duty application).

If bypassed, ATS480C11Y can be used provided that the current limiting is in accordance with the starting requirement.

To avoid making this calculation, simply use the table on page 18.

This type of installation only permits freewheel stopping and is not compatible with the cascade and preheating functions.

ATS 480…Y Motor

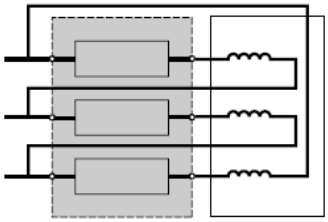

Soft starter wired in series with the motor windings.

Note: The rated current and current limiting settings as well as the current displayed during operation are on-line values (so do not have to be calculated by the user).

For this type of installation, observe the wiring scheme and the associated recommendations on page 35.

Motors in parallel

Motors may be connected in parallel provided that the power limit of the soft starter is not exceeded (the sum of the motor currents must not exceed the rated current of the soft starter selected depending on the type of application). Install an external overload relay for each motor.

Brush motor

The Altivar Soft Starter ATS480 can operate with a bypassed rotor resistance motor or with a resistance lug. The starting torque is modified in accordance with the rotor resistance. If necessary, maintain a low resistance in the rotor winding to obtain the required torque to overcome the resistive torque on starting.
A bypassed brush motor has a very low starting torque. A high stator current is required to obtain the sufficient starting torque.
Oversize the soft starter so that the current limiting value is seven times that of the rated current.
Note: Check that the motor starting torque, equal to seven times the rated current, is greater than the resistive torque.
Note: The ATS480 torque control enables excellent soft starting despite the current limit being seven times the rated current required to start the motor.

Special uses (continued)

Dahlander motor and 2-speed motor

The ATS480 can operate with a 2-speed motor. A motor demagnetization period must elapse before changing from low speed to high speed in order to avoid antiphases between the mains supply and the motor, which would generate very high currents.
The ATS480 can save two sets of motor parameters that can be selected to optimize start/stop at both speeds.
Select the soft starter using the three main criteria.

Very long motor cable

Very long motor cables cause voltage drops due to the resistance of the cable. If the voltage drop is significant, it could affect the current consumption and the torque available. This must therefore be taken into account when selecting the motor and the soft starter.

Soft starters in parallel on the same line supply

If several soft starters are installed on the same line supply, line chokes should be installed between the transformer and the soft starter (see page 33).

Restricted use

Do not use the Altivar Soft Starter ATS480 upstream of loads other than motors (for example, transformers and resistors are not allowed).
Do not connect power factor correction capacitors to the terminals of a motor controlled by an Altivar Soft Starter ATS480.

Altivar Soft Starter ATS480

Soft starters for asynchronous motors

Connection in-line, not bypassed
Motor power in kW

ATS480 in-line, not bypassed

Motor nameplate							ATS480			
Rated operational voltage (Ue) Rated motor power							Reference	Operational rated current (Ie)	Power dissipated at Ie	Weight
230 V	400 V	440 V	500 V	525 V	660 V	690 V				
kW	kW	kW	kW	kW	kW	kW		A	W	kg/*lb*
Normal duty applications										
4	7.5	7.5	9	9	11	15	**ATS480D17Y**	17	38	4.900/*10.8*
5.5	11	11	11	11	15	18.5	**ATS480D22Y**	22	54	4.900/*10.8*
7.5	15	15	18.5	18.5	22	22	**ATS480D32Y**	32	84	4.900/*10.8*
9	18.5	18.5	22	22	30	30	**ATS480D38Y**	38	96	4.900/*10.8*
11	22	22	30	30	37	37	**ATS480D47Y**	47	122	4.900/*10.8*
15	30	30	37	37	45	45	**ATS480D62Y**	62	181	8.300/*18.2*
18.5	37	37	45	45	55	55	**ATS480D75Y**	75	225	8.300/*18.2*
22	45	45	55	55	75	75	**ATS480D88Y**	88	270	8.300/*18.2*
30	55	55	75	75	90	90	**ATS480C11Y**	110	302	8.300/*18.2*
37	75	75	90	90	110	110	**ATS480C14Y**	140	366	12.4/*27.3*
45	90	90	110	110	132	160	**ATS480C17Y**	170	459	12.4/*27.3*
55	110	110	132	132	160	200	**ATS480C21Y**	210	560	18.2/*40.1*
75	132	132	160	160	220	250	**ATS480C25Y**	250	675	18.2/*40.1*
90	160	160	220	220	250	315	**ATS480C32Y**	320	882	18.2/*40.1*
110	220	220	250	250	355	400	**ATS480C41Y**	410	1319	51.4/*113.3*
132	250	250	315	315	400	500	**ATS480C48Y**	480	1366	51.4/*113.3*
160	315	355	400	400	560	560	**ATS480C59Y**	590	1711	51.4/*113.3*
–	355	400	–	–	630	630	**ATS480C66Y**	660	1938	51.4/*113.3*
220	400	500	500	500	710	710	**ATS480C79Y**	790	2517	115.0/*253.5*
250	500	630	630	630	900	900	**ATS480M10Y**	1000	2845	115.0/*253.5*
355	630	710	800	800	–	–	**ATS480M12Y**	1200	3472	115.0/*253.5*
Heavy duty applications										
3	5.5	5.5	7.5	7.5	9	11	**ATS480D17Y**	12	26	4.900/*10.8*
4	7.5	7.5	9	9	11	15	**ATS480D22Y**	17	39	4.900/*10.8*
5.5	11	11	11	11	15	18.5	**ATS480D32Y**	22	54	4.900/*10.8*
7.5	15	15	18.5	18.5	22	22	**ATS480D38Y**	32	79	4.900/*10.8*
9	18.5	18.5	22	22	30	30	**ATS480D47Y**	38	96	4.900/*10.8*
11	22	22	30	30	37	37	**ATS480D62Y**	47	133	8.300/*18.2*
15	30	30	37	37	45	45	**ATS480D75Y**	62	181	8.300/*18.2*
18.5	37	37	45	45	55	55	**ATS480D88Y**	75	225	8.300/*18.2*
22	45	45	55	55	75	75	**ATS480C11Y**	88	232	8.300/*18.2*
30	55	55	75	75	90	90	**ATS480C14Y**	110	286	12.4/*27.3*
37	75	75	90	90	110	110	**ATS480C17Y**	140	371	12.4/*27.3*
45	90	90	110	110	132	160	**ATS480C21Y**	170	448	18.2/*40.1*
55	110	110	132	132	160	200	**ATS480C25Y**	210	560	18.2/*40.1*
75	132	132	160	160	220	250	**ATS480C32Y**	250	675	18.2/*40.1*
90	160	160	220	220	250	315	**ATS480C41Y**	320	997	51.4/*113.3*
110	220	220	250	250	355	400	**ATS480C48Y**	410	1152	51.4/*113.3*
132	250	250	315	315	400	500	**ATS480C59Y**	480	1366	51.4/*113.3*
160	315	355	400	400	560	560	**ATS480C66Y**	590	1711	51.4/*113.3*
–	355	400	–	–	630	630	**ATS480C79Y**	660	2053	115.0/*253.5*
220	400	500	500	500	710	710	**ATS480M10Y**	790	2205	115.0/*253.5*
250	500	630	630	630	900	900	**ATS480M12Y**	1045	2845	115.0/*253.5*

Altivar Soft Starter ATS480

Soft starters for asynchronous motors

Connection inside delta, not bypassed
Motor power in kW

ATS480 inside delta, not bypassed					
Motor nameplate		ATS480			
Rated operational voltage (Ue) Rated motor power		Reference	Operational rated current (Ie)	Power dissipated at Ie	Weight
230 V	400 V				
kW	kW		A	W	kg/*lb*
Normal duty applications					
7.5	15	**ATS480D17Y**	17	38	4.900/*10.8*
9	18.5	**ATS480D22Y**	22	54	4.900/*10.8*
15	22	**ATS480D32Y**	32	84	4.900/*10.8*
18.5	30	**ATS480D38Y**	38	96	4.900/*10.8*
22	45	**ATS480D47Y**	47	122	4.900/*10.8*
30	55	**ATS480D62Y**	62	181	8.300/*18.2*
37	55	**ATS480D75Y**	75	225	8.300/*18.2*
45	75	**ATS480D88Y**	88	270	8.300/*18.2*
55	90	**ATS480C11Y**	110	302	8.300/*18.2*
75	110	**ATS480C14Y**	140	366	12.4/*27.3*
90	132	**ATS480C17Y**	170	459	12.4/*27.3*
110	160	**ATS480C21Y**	210	560	18.2/*40.1*
132	220	**ATS480C25Y**	250	675	18.2/*40.1*
160	250	**ATS480C32Y**	320	882	18.2/*40.1*
220	315	**ATS480C41Y**	410	1319	51.4/*113.3*
250	355	**ATS480C48Y**	480	1366	51.4/*113.3*
–	400	**ATS480C59Y**	590	1711	51.4/*113.3*
315	500	**ATS480C66Y**	660	1938	51.4/*113.3*
355	630	**ATS480C79Y**	790	2517	115.0/*253.5*
–	710	**ATS480M10Y**	1000	2845	115.0/*253.5*
500	–	**ATS480M12Y**	1200	3472	115.0/*253.5*
Heavy duty applications					
5.5	11	**ATS480D17Y**	12	26	4.900/*10.8*
7.5	15	**ATS480D22Y**	17	39	4.900/*10.8*
9	18.5	**ATS480D32Y**	22	54	4.900/*10.8*
15	22	**ATS480D38Y**	32	79	4.900/*10.8*
18.5	30	**ATS480D47Y**	38	96	8.300/*18.2*
22	45	**ATS480D62Y**	47	133	8.300/*18.2*
30	55	**ATS480D75Y**	62	181	8.300/*18.2*
37	55	**ATS480D88Y**	75	225	8.300/*18.2*
45	75	**ATS480C11Y**	88	232	8.300/*18.2*
55	90	**ATS480C14Y**	110	286	12.4/*27.3*
75	110	**ATS480C17Y**	140	371	12.4/*27.3*
90	132	**ATS480C21Y**	170	448	18.2/*40.1*
110	160	**ATS480C25Y**	210	560	18.2/*40.1*
132	220	**ATS480C32Y**	250	675	18.2/*40.1*
160	250	**ATS480C41Y**	320	997	51.4/*113.3*
220	315	**ATS480C48Y**	410	1152	51.4/*113.3*
250	355	**ATS480C59Y**	480	1366	51.4/*113.3*
–	400	**ATS480C66Y**	590	1711	51.4/*113.3*
315	500	**ATS480C79Y**	660	2053	115.0/*253.5*
355	630	**ATS480M10Y**	790	2205	115.0/*253.5*
–	710	**ATS480M12Y**	1045	2845	115.0/*253.5*

Altivar Soft Starter ATS480

Soft starters for asynchronous motors

Connection in-line, not bypassed
Motor power in HP

ATS480 in-line, not bypassed

Motor nameplate				ATS480			
Rated operational voltage (Ue) Rated motor power				Reference	Operational rated current (Ie)	Power dissipated at Ie	Weight
208 V	230 V	460 V	575 V				
HP	HP	HP	HP		A	W	kg/lb
Normal duty applications							
3	5	10	15	ATS480D17Y	17	38	4.900/10.8
5	7.5	15	20	ATS480D22Y	22	54	4.900/10.8
7.5	10	20	25	ATS480D32Y	32	84	4.900/10.8
10	–	25	30	ATS480D38Y	38	96	4.900/10.8
–	15	30	40	ATS480D47Y	47	122	4.900/10.8
15	20	40	50	ATS480D62Y	62	181	8.300/18.2
20	25	50	60	ATS480D75Y	75	225	8.300/18.2
25	30	60	75	ATS480D88Y	88	270	8.300/18.2
30	40	75	100	ATS480C11Y	110	302	8.300/18.2
40	50	100	125	ATS480C14Y	140	366	12.4/27.3
50	60	125	150	ATS480C17Y	170	459	12.4/27.3
60	75	150	200	ATS480C21Y	210	560	18.2/40.1
75	100	200	250	ATS480C25Y	250	675	18.2/40.1
100	125	250	300	ATS480C32Y	320	882	18.2/40.1
125	150	300	350	ATS480C41Y	410	1319	51.4/113.3
150	–	350	400	ATS480C48Y	480	1366	51.4/113.3
–	200	400	500	ATS480C59Y	590	1711	51.4/113.3
200	250	500	600	ATS480C66Y	660	1938	51.4/113.3
250	300	600	800	ATS480C79Y	790	2517	115.0/253.5
350	350	800	1000	ATS480M10Y	1000	2845	115.0/253.5
400	450	1000	1200	ATS480M12Y	1200	3472	115.0/253.5
Heavy duty applications							
2	3	7.5	10	ATS480D17Y	12	26	4.900/10.8
3	5	10	15	ATS480D22Y	17	39	4.900/10.8
5	7.5	15	20	ATS480D32Y	22	54	4.900/10.8
7.5	10	20	25	ATS480D38Y	32	79	4.900/10.8
10	–	25	30	ATS480D47Y	38	96	8.300/18.2
–	15	30	40	ATS480D62Y	47	133	8.300/18.2
15	20	40	50	ATS480D75Y	62	181	8.300/18.2
20	25	50	60	ATS480D88Y	75	225	8.300/18.2
25	30	60	75	ATS480C11Y	88	232	8.300/18.2
30	40	75	100	ATS480C14Y	110	286	12.4/27.3
40	50	100	125	ATS480C17Y	140	371	12.4/27.3
50	60	125	150	ATS480C21Y	170	448	18.2/40.1
60	75	150	200	ATS480C25Y	210	560	18.2/40.1
75	100	200	250	ATS480C32Y	250	675	18.2/40.1
100	125	250	300	ATS480C41Y	320	997	51.4/113.3
125	150	300	350	ATS480C48Y	410	1152	51.4/113.3
150	–	350	400	ATS480C59Y	480	1366	51.4/113.3
–	200	400	500	ATS480C66Y	590	1711	51.4/113.3
200	250	500	600	ATS480C79Y	660	2053	115.0/253.5
250	300	600	800	ATS480M10Y	790	2205	115.0/253.5
350	350	800	1000	ATS480M12Y	1045	2845	115.0/253.5

Altivar Soft Starter ATS480

Soft starters for asynchronous motors

Replacement parts

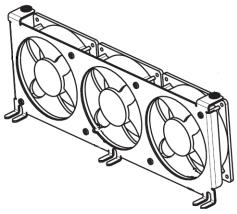

VZ3V485

Replacement parts

Description	Corresponding soft starter	Reference	Weight kg/*lb*
Fan kit + instruction sheet	ATS480D32Y…D38Y	VZ3V481	0.270/*0.595*
	ATS480D47Y	VZ3V4811	0.255/*0.562*
	ATS480D62Y…C11Y	VZ3V482	0.430/*0.948*
	ATS480C14Y…C17Y	VZ3V483	0.460/*1.014*
	ATS480C21Y…C32Y	VZ3V484	0.670/*1.477*
	ATS480C41Y…C66Y	VZ3V485	1.400/*3.100*
	ATS480C79Y…M12Y (two kits necessary to replace all fans)	VZ3V485	1.400/*3.100*
Control terminal strips	All ATS480	VY1G480C01	0.110/*0.243*
Control blocks plastic covers	All ATS480	VY1G480M01	0.230/*0.507*
Control block + instruction sheet	All ATS480	VX4G4801	0.390/*0.860*

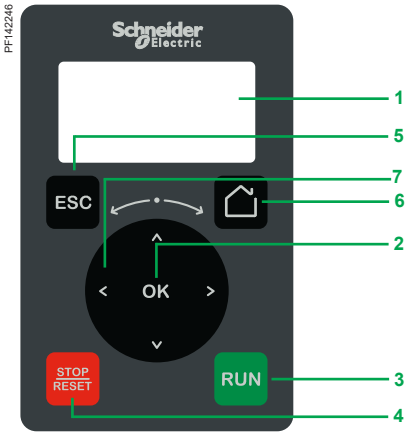

Plain text display terminal

Plain text display terminal

The plain text display terminal is delivered with Altivar Soft Starter ATS480 and can be:
- Connected and mounted on the front of the soft starter
- Connected and mounted on an enclosure door using a remote-mounting accessory

This terminal is used to:
- Control, adjust, and configure the soft starter
- Display current values (motor, I/O, and machine data)
- Store and download configurations (several configuration files can be stored in the memory)
- Duplicate the configuration of one powered-up soft starter on another powered-up soft starter

Other features:
- Displaying the device - via a web server and password; a display terminal is required to log in to the web server for the first time
- Two lines
- Languages (Chinese, English, French, German, Italian, Spanish)
- White backlit LCD screen
- Operating temperature range: -15…50 °C/*+5…122 °F*
- IP21 protection
- Removable, easy plug-in with RJ45 port

Description

The front of the display terminal comprises:
1 LCD backlight screen
2 OK button: saves the current value (ENT)
3 RUN button: local control of motor run command
4 STOP/RESET button: local control of motor stop command/clearing detected errors
5 ESC button: aborts a value, parameter, or menu to return to the previous selection
6 Home: root menu
7 Turn ±: navigation dial, increases or decreases the value, goes to the next or previous line

References

Description	Reference	Weight kg/ *lb*
Plain text display terminal	VW3A1113	0.200/ *0.441*

PF142222

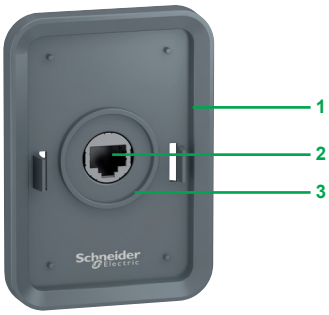

Remote-mounting kit for mounting plain text display terminal on enclosure door (front panel)

PF142251

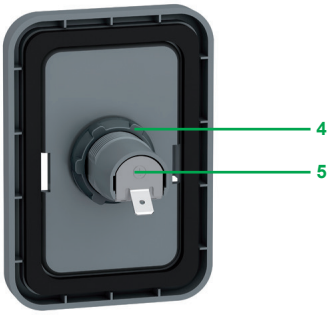

Remote-mounting kit for mounting plain text display terminal on enclosure door (rear panel)

Mounting kit for plain text display terminal

■ Remote-mounting kit for mounting on an enclosure door with IP43 degree of protection as standard

Description

The kit includes:
- Tightening tool (also sold separately under the reference ZB5AZ905)

1 Mounting plate
2 RJ45 port for the plain text display terminal
3 Seal
4 Fixing nut
5 RJ45 port for connecting the remote-mounting cordset

Cordsets should be ordered separately depending on the length required.
Drilling a hole with a standard Ø 22 tool, as used for a pushbutton, allows the unit to be mounted without the need for a cut-out in the enclosure (Ø 22.5 mm/*Ø 0.89 in.* drill hole).

An anti-rotation function is provided that works as follows: when the kit is locked tightly onto the panel by the nut, the gasket on the back cannot rotate.

References

Description	Length m/ *ft*	IP degree of protection	Reference	Weight kg/ *lb*
Remote-mounting kit Order with remote-mounting cordset VW3A1104R●●●	–	43	VW3A1114	–
Tightening tool For remote-mounting kit	–	–	ZB5AZ905	0.016/ *0.035*
Remote-mounting cordset Equipped with two RJ45 connectors	1/ *3.28*	–	VW3A1104R10	0.050/ *0.110*
	3/ *9.84*	–	VW3A1104R30	0.150/ *0.331*
	5/ *16.4*	–	VW3A1104R50	0.250/ *0.551*
	10/ *32.8*	–	VW3A1104R100	0.500/ *1.102*

Communication accessory

Description	Reference	Weight kg/ *lb*
Wi-Fi dongle Portable battery powered Wi-Fi access point for Wi-Fi equipment (PC, tablet, smartphone, etc.)	TCSEGWB13W	0.350/ *0.772*

PF130899

Graphic display terminal VW3A1111

ATV340_63441_CPSCT16025

Detected fault: The red screen backlight is activated automatically

PF140357

Embedded dynamic QR codes for contextual, instantaneous access to online help

PF140358

Scanning the QR code from a smartphone or tablet

PF140359

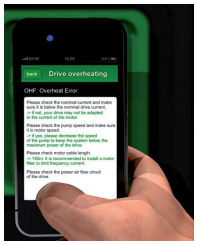

Instant access to online help

Graphic display terminal

This terminal can be:
- Connected and mounted on an enclosure door using a remote-mounting accessory
- Connected to a PC to exchange files via a Mini USB/USB connection *(1)*
- Connected to several soft starters and drives in multidrop mode (see page 25)

This terminal is used to:
- Control, adjust, and configure the soft starter
- Display current values (motor, I/O, and machine data)
- Display graphic dashboards such as the energy consumption monitoring dashboard
- Store and download configurations (several configuration files can be stored in the 16 MB memory)
- Duplicate the configuration of one powered-up soft starter on another powered-up soft starter
- Copy configurations from a PC or soft starter and duplicate them on another soft starter (the soft starters should be powered up throughout the duplication operations)

Other characteristics:
- Up to 24 languages (complete alphabets) covering the majority of countries around the world (languages can be removed, added, and updated according to user needs; please consult our website)
- Two-color backlit display (white and red); if an error is detected, the red backlight is activated automatically (function can be disabled)
- Operating temperature range: -15…50 °C/*+5…122 °F*
- Degree of protection: IP65
- Realtime clock with 10-year backup battery

Multipoint screen

The graphic display terminal is connected to one soft starter only. However, communication is possible between a graphic display terminal and several Altivar soft starters (ATS480) and drives (ATV340, ATV600, and ATV900) connected on the same Modbus serial fieldbus via the RJ45 port (HMI or Modbus serial). In this case, multipoint mode is automatically applied to the graphic display terminal.

A maximum of 32 soft starters or drives can be connected on the same Modbus serial fieldbus.

Apart from the Stop function linked to the STOP/RESET key, multipoint mode cannot be used to apply a reset after an error has been detected or to control the soft starter via the graphic display terminal: in multipoint mode, the Run key and the Local/Remote key are disabled.

Description

Display:
- Eight lines, 240 x 160 pixels
- Displays bar charts, gages, and trend charts
- Four function keys to facilitate navigation and provide contextual links for enabling functions
- STOP/RESET button: Local control of motor stop command/clearing detected errors
- RUN button: Local control of motor run command
- Navigation buttons:
  - OK button: Saves the current value (ENT)
  - Turn ±: Increases or decreases the value, goes to the next or previous line
  - ESC button: Aborts a value, parameter, or menu to return to the previous selection
  - Home: Root menu
  - Information (i): Contextual help

References

Description	Reference	Weight kg/ *lb*
Graphic display terminal	**VW3A1111**	0.200/ *0.441*

(1) Graphic display terminal used as a handheld terminal only.

Remote-mounting kit for mounting graphic display terminal on enclosure door (front panel)

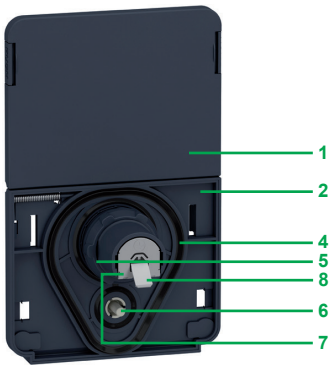

Remote-mounting kit for graphic display terminal (rear panel)

Accessories for graphic display terminal

- Remote-mounting kit for mounting on enclosure door with IP65/UL Type 12 degree of protection as standard

The kit includes:
- – Tightening tool (also sold separately under the reference ZB5AZ905)
- 1 Cover plate to maintain IP65 protection when there is no terminal connected
- 2 Mounting plate
- 3 RJ45 port for the graphic display terminal
- 4 Seal
- 5 Fixing nut
- 6 Anti-rotation pin
- 7 RJ45 port for connecting the remote-mounting cordset (10 m/*32.8 ft* maximum) Cordsets should be ordered separately depending on the length required.
- 8 Grounding connector

Drilling a hole with a standard Ø 22 tool, as used for a pushbutton, allows the unit to be mounted without the need for a cut-out in the enclosure (Ø 22.5 mm/*Ø 0.89 in.* drill hole).

References

Description	Length m/ *ft*	IP rating	Reference	Weight kg/ *lb*
Remote mounting kit Order with remote-mounting cordset VW3A1104R●●●	–	65/ UL Type 12	VW3A1112	–
Tightening tool for remote mounting kit	–	–	ZB5AZ905	0.016/ *0.035*
Remote-mounting cordset equipped with two RJ45 connectors	1/ *3.28*	–	VW3A1104R10	0.050/ *0.110*
	3/ *9.84*	–	VW3A1104R30	0.150/ *0.331*
	5/ *16.4*	–	VW3A1104R50	0.250/ *0.551*
	10/ *32.8*	–	VW3A1104R100	0.500/ *1.102*
USB/Mini B USB cable for connecting the graphic display terminal to a PC	–	–	TCSXCNAMUM3P	–

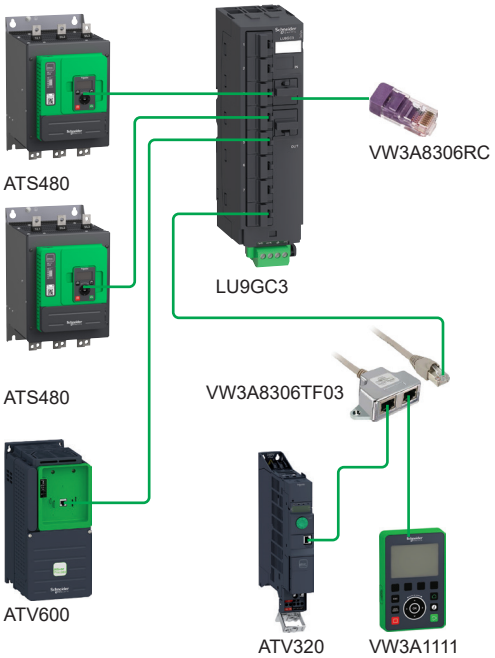

Example of multipoint screen architecture

Multidrop connection accessories

These accessories are used to connect a graphic display terminal to several ATS480 soft starters via a multidrop link. This multidrop connection uses the RJ45 terminal port on the front of the Altivar Soft Starter ATS480.

Connection accessories

Description			Sold in lots of	Unit reference	Weight kg/ *lb*
Modbus splitter box, 10 RJ45 connectors, and one screw terminal block			–	LU9GC3	0.500/ *1.102*
Modbus T-junction boxes	With 0.3 m/*0.98 ft* integrated cable		–	VW3A8306TF03	0.190/ *0.419*
	With 1 m/*3.28 ft* integrated cable		–	VW3A8306TF10	0.210/ *0.463*
Modbus line terminator	For RJ45 connector	R = 120 Ω C = 1 nf	2	VW3A8306RC	0.010/ *0.022*

Cordsets (equipped with two RJ45 connectors)

Used for	Length m/ *ft*	Reference	Weight kg/ *lb*
Serial link	0.3/ *0.98*	VW3A8306R03	0.025/ *0.055*
	1/ *3.28*	VW3A8306R10	0.060/ *0.132*
	3/ *9.84*	VW3A8306R30	0.130/ *0.287*

DTM

Presentation

Using FDT/DTM technology, it is possible to configure, control, and diagnose Altivar Soft Starter ATS480 directly in EcoStruxure Control Expert and SoMove software by means of the same software brick (DTM).
FDT/DTM technology standardizes the communication interface between field devices and host systems. The DTM contains a uniform structure for managing soft starter access parameters.

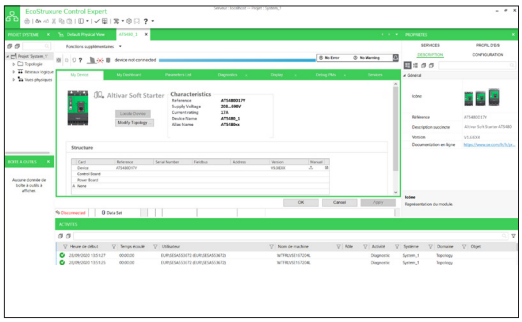

Altivar Soft Starter ATS480 DTM in EcoStruxure Control Expert

Specific functions of Altivar Soft Starter ATS480

- Offline or online access to soft starter data
- Configuration and management of cybersecurity features
- Access to audit log file for cybersecurity threat intelligence
- Transfer of configuration files from and to the soft starter
- Customization
- Access to soft starter parameters and communication modules
- Graphic interface to assist with configuration of the ATS480 functions
- Detected error and warning logs (with timestamping)

Advantages of the DTM library in EcoStruxure Control Expert:
- Single tool for configuration, setup, and diagnostics
- Network scan for automatic recognition of network configuration
- Ability to add/remove, copy/paste configuration files from other soft starters in the same architecture
- Single input point for all parameters shared between the ePAC (programmable controller) and the Altivar Soft Starter ATS480
- Creation of profiles for implicit communication with the ePAC as well as dedicated profiles for programs with DFBs (derived function blocks)
- Integration in the fieldbus topology
- Soft starter configuration is an integral part of the EcoStruxure Control Expert project file (STU) and the archive file (STA)

Advantages of the DTM library in SoMove:
- Altivar-oriented software environment
- Wired connection to USB-A port or the Ethernet communication port
- Standard cable (file transfer performance)
- Third-party software and downloads:
  - The Altivar Soft Starter DTM library is a flexible, open, and interactive tool that can be used in a third-party FDT.
  - DTMs can be downloaded from our website.

SoMove software

SoMove software

Presentation

SoMove software for PC is used to configure, set up, maintain, and upgrade the firmware (see page 32) of Altivar Soft Starter ATS480.

In addition to the functions offered by the DTM, SoMove software features the conversion of ATS48 into an ATS480 configuration.

The software can be connected to Altivar Soft Starter ATS480 via:
- Modbus connection
- Ethernet Modbus TCP *(1)* and WiFi connection with the WiFi dongle **TCSEGWB131W**
- Ethernet Modbus TCP *(1)* connection
- CANopen *(1)*

For more information on SoMove setup software, please consult the SoMove Setup Software catalog.

(1) Requires an optional communication module.

Table showing possible combinations of accessories for ATS480

ATS480 reference	Protective covers for power terminals	Line chokes
ATS480D17Y	–	VZ1L015UM17T
ATS480D22Y	–	VZ1L030U800T
ATS480D32Y	–	VZ1L040U600T
ATS480D38Y	–	VZ1L040U600T
ATS480D47Y	–	VZ1L070U350T
ATS480D62Y	–	VZ1L070U350T
ATS480D75Y	–	VZ1L150U170T
ATS480D88Y	–	VZ1L150U170T
ATS480C11Y	–	VZ1L150U170T
ATS480C14Y	LA9F702	VZ1L150U170T
ATS480C17Y	LA9F702	VZ1L250U100T
ATS480C21Y	LA9F703	VZ1L250U100T
ATS480C25Y	LA9F703	VZ1L250U100T
ATS480C32Y	LA9F703	VZ1L325U075T
ATS480C41Y	LA9F704	VZ1L530U045T
ATS480C48Y	LA9F704	VZ1L530U045T
ATS480C59Y	LA9F704	VZ1LM10U024T
ATS480C66Y	LA9F704	VZ1LM10U024T
ATS480C79Y	–	VZ1LM10U024T
ATS480M10Y	–	VZ1LM10U024T
ATS480M12Y	–	VZ1LM14U016T

List of communication modules

Description	Reference
Modbus TCP, EtherNet/IP	VW3A3720
CANopen daisy chain	VW3A3608
CANopen SUB-D	VW3A3618
CANopen screw terminal block	VW3A3628
PROFIBUS DP V1	VW3A3607

Options:
page 33

Communication options:
page 28

Altivar Soft Starter ATS480

Soft starters for asynchronous motors

Communication buses and networks

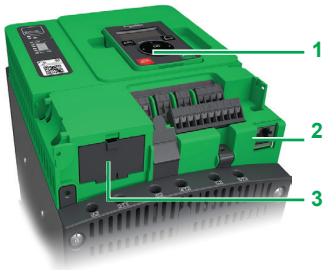

Altivar Soft Starter ATS480 ports and slots

Description

The Altivar Soft Starter ATS480 range has been designed to simplify connections to communication buses and networks by means of the following:

1 Integrated RJ45 communication port for HMI on the front
2 Integrated RJ45 communication port for Modbus fieldbus
3 Slot available for an additional communication module

Functions

Altivar Soft Starter ATS480 functions can be accessed via the communication buses and networks:

- Control
- Monitoring
- Adjustment
- Configuration

The command may come from different sources:

- Digital input or analog I/O terminals
- Communication bus or network
- Remote/local display terminals

As one of the advanced functions, ATS480 control sources can be managed and switched according to the application requirements.
The communication periodic I/O data assignment can be selected using the network configuration software.
The Altivar Soft Starter ATS480 can be controlled according to two communication profiles:

- "Standard" communication profile used on Altivar Soft Starter ATS480
- "Compatibility" communication profile used on ATS48 connected through Modbus serial

Communication is monitored according to criteria specific to each protocol.
Regardless of protocol type, the response of the soft starter to a detected communication interruption can be configured as follows:

- Freewheel stop, stop on ramp, fast stop, or braked stop
- Maintain the last command received
- Ignore the detected error

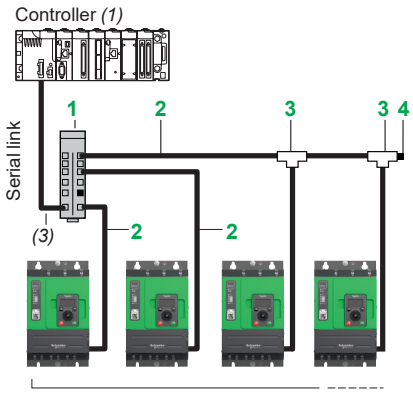

Altivar Soft Starter ATS480

Example of serial link architecture

Modbus serial link

Connection accessories

Description		Item	Length m/ *ft*	Reference	Weight kg/ *lb*
Modbus splitter box 10 RJ45 connectors and one screw terminal block		1	–	LU9GC3	0.500/ *1.102*
Cordsets for modbus serial link equipped with two RJ45 connectors		2	0.3/ *0.98*	VW3A8306R03	0.025/ *0.055*
			1/ *3.28*	VW3A8306R10	0.060/ *0.132*
			3/ *9.84*	VW3A8306R30	0.130/ *0.287*
Modbus T-junction boxes (with integrated cable)		3	0.3/ *0.98*	VW3A8306TF03	0.190/ *0.419*
			1/ *3.28*	VW3A8306TF10	0.210/ *0.463*
Modbus line terminator For RJ45 connector (2)	R = 120 Ω	4	–	VW3A8306RC	0.020/ *0.044*
	R = 150 Ω		–	VW3A8306R	0.020/ *0.044*

(1) Please refer to the Modicon catalogs.
(2) Sold in lots of two.
(3) Cable depends on the controller.

Altivar Soft Starter ATS480

Soft starters for asynchronous motors

Options: communication modules

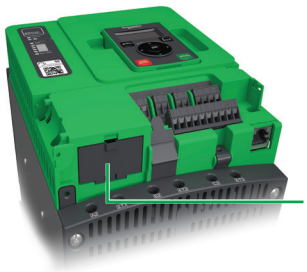

Communication module slot

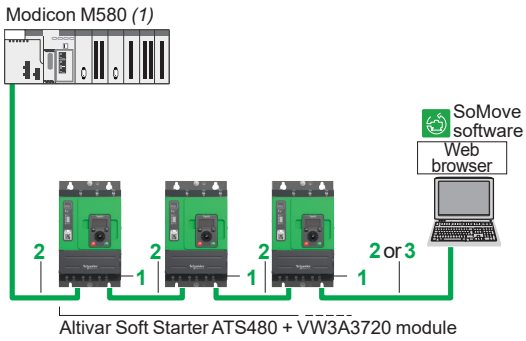

Example of connection on an EtherNet/IP network

Modbus TCP and EtherNet/IP networks

Presentation

This communication module offers standard services regularly used in industrial networks:

- EtherNet IP adapter including standard CIP objects (communication adapter objects), compliant with ODVA specification
- The RSTP connection allows ring topology to help ensure continuity of service.
- Dual port allows daisy chain connection to simplify cabling and network infrastructure (no need to use a switch).
- Modbus TCP message handling is based on the Modbus protocol and is used to exchange process data with other network devices (e.g. a PLC). It provides Altivar Soft Starter ATS480 with access to the Modbus protocol and to the high performance of the Ethernet network, which is the communication standard for numerous devices.
- SNMP (Simple Network Management Protocol) offers standard diagnostics services for network management tools.
- The FDR (fast device replacement) service allows automatic reconfiguration of a new device installed to replace an existing device.
- Device integrity is reinforced by disabling some unused services.
- Setup and adjustment tools (SoMove, EcoStruxure Control Expert with DTM) can be connected locally or remotely.
- The embedded web server is used to display operating data and dashboards as well as to configure and perform system elements diagnostics from any web browser.

These numerous services offered by Altivar Soft Starter ATS480 simplify integration into Schneider Electric Automation systems.

Description	Item	Length m/ *ft*	Reference	Weight kg/ *lb*
Communication module *(2)*				
EthernNet/IP and Modbus TCP dual port module For connection to the Modbus TCP or EtherNet/IP network Ports: Two RJ45 connectors ■ 10/100 Mbps, half duplex and full duplex ■ Embedded web server Requires cordset 490NTW000●●/●●U or 490NTC●●	1	–	VW3A3720	0.020/ *0.044*
ConneXium cordsets *(3)*				
Straight shielded twisted pair cables equipped with two RJ45 connectors conforming to EIA/TIA-568 category 5 and IEC ???11801/EN 50173-1, class D	2	2/ *6.56*	490NTW00002	–
		5/ *16*	490NTW00005	–
		12/ *39*	490NTW00012	–
Crossover shielded twisted pair cables equipped with two RJ45 connectors conforming to EIA/TIA-568 category 5 and IEC ???11801/EN 50173-1, class D	3	5/ *16*	490NTC00005	–
		15/ *49*	490NTC00015	–
Straight shielded twisted pair cables equipped with two RJ45 connectors conforming to UL and CSA 22.1	2	2/ *6.56*	490NTW00002U	–
		5/ *16*	490NTW00005U	–
		12/ *39*	490NTW00012U	–

(1) Please consult the PLC, PAC and Dedicated Controllers page on our website.
(2) Minimum version compatible with Altivar Soft Starter ATS480: V2.1
(3) Also exist in 40 and 80 m/131 and 262 ft lengths. For other ConneXium connection accessories, please refer to the Modicon Switch catalog.

Altivar Soft Starter ATS480

Soft starters for asynchronous motors

Options: communication modules

PF514340

VW3A3608

PF514341

VW3A3618

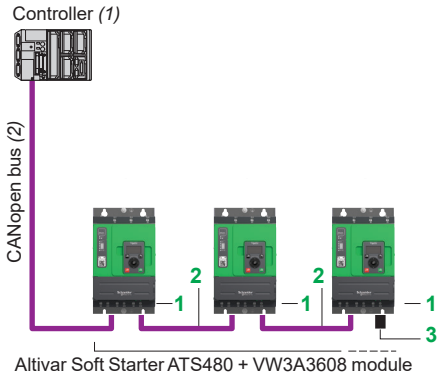

Optimized solution for daisy chain connection to the CANopen bus

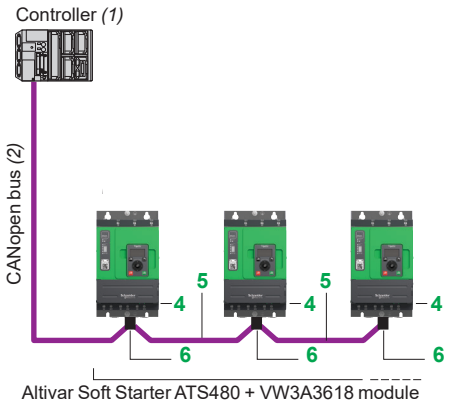

Example of connection to the CANopen bus via SUB-D connector

CANopen bus

Description	Item	Length m/ *ft*	Reference	Weight kg/ *lb*
Communication module				
CANopen daisy chain module Ports: Two RJ45 connectors	1	–	VW3A3608	–
Connection to RJ45 connector (optimized solution for daisy chain connection on CANopen bus)				
CANopen cordsets equipped with two RJ45 connectors	2	0.3/ *0.98*	VW3CANCARR03	0.050/ *0.110*
		1/ *3.28*	VW3CANCARR1	0.500/ *1.102*
CANopen line terminator for RJ45 connector	3	–	TCSCAR013M120	–
Communication module				
CANopen SUB-D module Ports: One 9-way male SUB-D connector	4	–	VW3A3618	–
Connection to SUB-D connector				
CANopen cables *(2) (3)* Standard cable, CE mark Low smoke zero halogen Flame-retardant (IEC 60332-1)	5	50/ *164*	TSXCANCA50	4.930/ *10.869*
		100/ *328*	TSXCANCA100	8.800/ *19.401*
		300/ *984*	TSXCANCA300	24.560/ *54.145*
CANopen cables *(2) (3)* UL certification, CE mark Flame-retardant (IEC 60332-2)	5	50/ *164*	TSXCANCB50	3.580/ *7.893*
		100/ *328*	TSXCANCB100	7.840/ *17.284*
		300/ *984*	TSXCANCB300	21.870/ *48.215*
CANopen cables *(2) (3)* Cable for harsh environments or mobile installations, CE mark Low smoke zero halogen Flame-retardant (IEC 60332-1)	5	50/ *164*	TSXCANCD50	3.510/ *7.738*
		100/ *328*	TSXCANCD100	7.770/ *17.130*
		300/ *984*	TSXCANCD300	7.770/ *17.130*
IP20 straight CANopen connector *(4)* 9-way female SUB-D connector with line terminator that can be deactivated For connecting CAN-H, CAN-L, CAN-GND	6	–	TSXCANKCDF180T	0.049/ *0.108*

(1) Please consult the PLC, PAC and Dedicated Controllers page on our website.
(2) Cable depends on the controller, please refer to the CANopen for machines catalog.
(3) Standard environment:
- *No particular environmental constraints*
- *Operating temperature between 5 and 60 °C/41 and 140 °F*
- *Fixed installation*

Harsh environment:
- *Resistance to hydrocarbons, industrial oils, detergents, solder splashes*
- *Relative humidity up to 100%*
- *Saline atmosphere*
- *Operating temperature between -10 and +70 °C/+14 and 158 °F*
- *Significant temperature variations*

(4) Only straight connectors are compatible with Altivar Soft Starter ATS480.

Altivar Soft Starter ATS480

Soft starters for asynchronous motors

Options: communication modules

PF095129

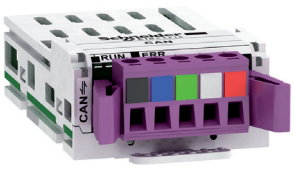

VW3A3628

Controller *(1)*

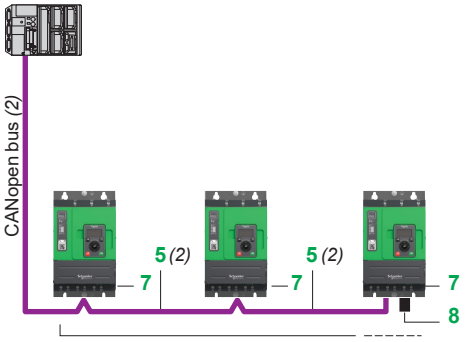

Altivar Soft Starter ATS480 + VW3A3628 module

Example of connection to the CANopen bus with a screw terminal block

PF095130

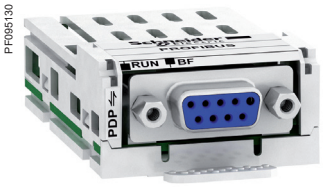

VW3A3607

CANopen bus (continued)

Description	Item	Length m/ *ft*	Reference	Weight kg/ *lb*
Communication module				
CANopen module Port: One 5-way screw terminal block	7	–	VW3A3628	–
Other connexion accessories and cordsets				
CANopen IP20 cordsets equipped with two 9-way female SUB-D connectors Standard cable, CE mark. Low smoke zero halogen Flame-retardant (IEC 60332-1)	–	0.3/ *0.98*	TSXCANCADD03	0.091/ *0.201*
		1/ *3.28*	TSXCANCADD1	0.143/ *0.315*
		3/ *9.84*	TSXCANCBDD3	0.268/ *0.591*
		5/ *16.40*	TSXCANCBDD5	0.400/ *0.882*
IP20 CANopen tap junction boxes equipped with: ■ Four 9-way male SUB-D connectors + screw terminal block for trunk cable tap link ■ Line terminator	–	–	TSXCANTDM4	0.196/ *0.432*
IP20 CANopen tap junction boxes equipped with: ■ Two screw terminal blocks for trunk cable tap link ■ Two RJ45 connectors for connecting soft starters ■ One RJ45 connector for connecting a PC	–	–	VW3CANTAP2	0.480/ *1.058*
CANopen line terminator for screw terminal connector *(3)*	8	–	TCSCAR01NM120	–

PROFIBUS DP V1 bus *(4)*

Description	Reference	Weight kg/ *lb*
Communication module		
PROFIBUS DP V1 module Port: One 9-way female SUB-D connector Conforming to PROFIBUS DP V1 Offers several message handling modes based on DP V1	VW3A3607	0.140/ *0.309*
SUB-D connection		
IP20 straight connectors *(5)* for Profibus module	LU9AD7	–

(1) Please refer to the Modicon catalogs.
(2) Refer to the connection to SUB-D connector cable selection table on the previous page.
(3) Sold in lots of two.
(4) Minimum version compatible with Altivar Soft Starters ATS480: V1.16.
(5) Only straight connectors are compatible with Altivar Soft Starters ATS480.

Altivar Soft Starter ATS480

Soft starters for asynchronous motors

Firmware update

Firmware update through Modbus TCP/Ethernet/IP or Modbus serial using SoMove

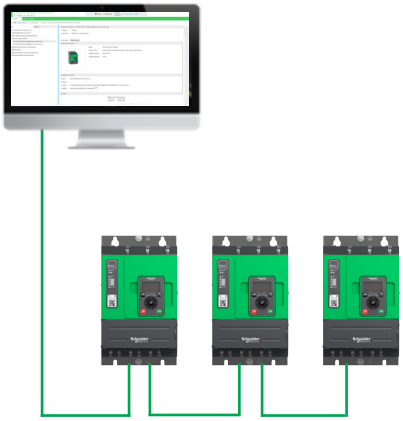

Firmware upload of several ATS480 at the same time through Modbus TCP/Ethernet/IP or Modbus serial using Ecostruxure Automation Device Maintenance

Firmware update using SoMove or EcoStruxure Automation Device Maintenance

Presentation

The firmware of the Altivar Soft Starter ATS480 offer can be updated.
This includes:

- The firmware of the ATS480 product
- The texts and languages of the display terminals
- The firmware of the display terminals *(1)*
- The firmware of communication modules *(1)*

The firmware and languages are available from the Altivar Soft Starter ATS480 page on our website. Using Schneider Electric Software Update tool, notifications are automatically sent when new updates are available.

Firmware update process

Different ways are proposed to update the firmware:

- Single product firmware update using SoMove software *(2)*
- Multiple product firmware update using EcoStruxure Automation Device Maintenance *(3)*

The update process comprises two steps:

- The first step is to transfer the firmware to the product, which can be performed when the motor is either running or stopped. The control section of the ATS480 must be powered on. The package of product firmware and keypad languages can be uploaded in one operation via the Modbus serial port or the Ethernet port of the VW3A3720 communication module. The Modbus TCP/EtherNet/IP communication module firmware is uploaded in a separate package.
- The second step is to apply the uploaded firmware in the products: the control section must be powered on and this operation can only be performed with the motor stopped. The firmware can be applied from EcoStruxure Automation Device Maintenance, SoMove, or the display terminal.

This two-step process avoids the risk of a potential loss of usability of the product in case of wrong operations during the firmware update process, while reducing the amount of time that the motor is stopped.

Cybersecurity-related features in the firmware update:

- The firmware is delivered with a digital certificate that is generated by a cryptographic key.
- The ATS480 checks the authenticity of the firmware before applying it. The authenticity of the firmware is also checked at each power-up.
- The firmware can only be updated and applied by a registered user with a valid user account and associated rights.
- Firmware update operations are recorded as events in the security related reports.

Connection accessories

Description	Length m/ *ft*	Reference	Weight kg/ *lb*
High-speed USB-A/RJ45 flashing cordset	2.5/ *8.20*	VW3A8127	–
Connection cable USB/RJ45 For connection between PC and soft starter	2.5/ *8.20*	TCSMCNAM3M002P	–
RJ45 female/female adapter For connection to plain text display terminal	–	VW3A1105	0.010/ *0.022*

(1) Contact Schneider Electric Services to update the firmware of the PROFIBUS DP communication module or the plain text display terminal.
(2) Refer to page 26.
(3) Download EcoStruxure Automation Device Maintenance from its dedicated page on our website.

Altivar Soft Starter ATS480

Soft starters for asynchronous motors

Options: Line chokes

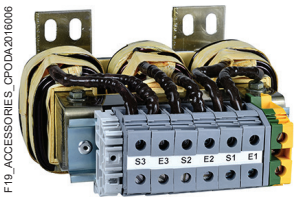

F19_ACCESSORIES_CPODA2016006

VZ1L150U170T

Line chokes

The use of line chokes is recommended in particular when installing several soft starters on the same line supply to limit low frequency interference that may affect low level loads.
The inductance values are defined for a voltage drop between 3% and 5% of the nominal line voltage.
Install the line choke between the line contactor and the soft starter.

References

Corresponding soft starter	Line choke			Reference	Weight
	Inductance value mH	Nominal current A	Degree of protection		kg/ *lb*
ATS480D17Y	1.7	15	IP20	VZ1L015UM17T	2.100/ *4.630*
ATS480D22Y	0.8	30	IP20	VZ1L030U800T	4.100/ *9.039*
ATS480D32Y…D38Y	0.6	40	IP20	VZ1L040U600T	5.100/ *11.2*
ATS480D47Y…D62Y	0.35	70	IP20	VZ1L070U350T	8.000/ *17.6*
ATS480D75Y…C14Y	0.17	150	IP00	VZ1L150U170T	14.9/ *32.8*
ATS480C17Y…C25Y	0.1	250	IP00	VZ1L250U100T	24.3/ *53.5*
ATS480C32Y	0.075	325	IP00	VZ1L325U075T	28.9/ *63.7*
ATS480C41Y…C48Y	0.045	530	IP00	VZ1L530U045T	37.0/ *81.5*
ATS480C59Y…M10Y	0.024	1025	IP00	VZ1LM10U024T	66.0/ *145.5*
ATS480M12Y	0.016	1435	IP00	VZ1LM14U016T	80.0/ *176.3*

Combinations:
page 27

Dimensions:
page 45

Altivar Soft Starter ATS480

Soft starters for asynchronous motors

Options: Protective covers

PB111592

LA9F703

Protective covers for power terminals

The protective covers are intended to be mounted on 140 to 660 A units that have unprotected power terminals. The protective covers are to be used with eyelet connections.

References

Corresponding soft starter	Number of covers per set	Reference	Weight kg/ *lb*
ATS480C14Y…C17Y	6	LA9F702	0.250/ *0.551*
ATS480C21Y…C32Y	6	LA9F703	0.250/ *0.551*
ATS480C41Y…C66Y	6	LA9F704	0.250/ *0.551*

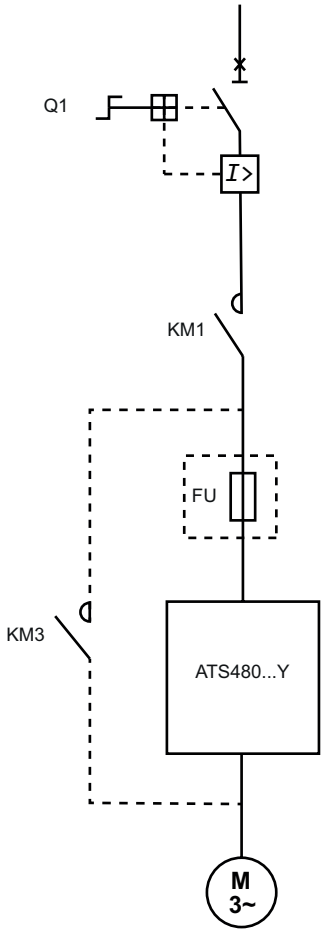

Presentation

Type of coordination

The EN/IEC 60947-4-1 standard makes a distinction between two different types of coordination, which are designated coordination type 1 and coordination type 2:

- Type 1 coordination requires that, under short-circuit conditions, the contactor or soft starter shall cause no danger to persons or the installation and may not be suitable for further service without repair and replacement of parts.

- Type 2 coordination requires that, under short-circuit conditions, the contactor or soft starter shall cause no danger to persons or the installation and shall be suitable for further use. The risk of contact welding is recognized, in which case the manufacturer shall indicate the measures to be taken as regards the maintenance of the equipment.

- For type 2 coordination (according to IEC 60947-4-1 and IEC 60947-4-2), install fast-acting fuses in series with the soft starter to ensure that the ATS480 will be protected in the event of a short circuit. After a short circuit, fast-acting fuses must be replaced, and the contactor must be checked.

***Note**: Use of a short-circuit protection device (SCPD) that does not comply with the manufacturer's specification can invalidate the coordination.*

Bypass

The bypass contactor is optional as the ATS480 is able to power the motor during starting, running at fixed speed, and stopping without any loss of performance. When used, the bypass contactor is controlled based on relay R2. The assignment of relay R2 cannot be modified.

When bypassed, an ATS480 with a lower current rating could be used (please refer to page 18) or the ATS480 can operate at a maximum ambient temperature of 50 °C without derating.

Line contactor

The line contactor on ATS480 is optional.
When used, the line contactor is controlled by relay R1. There are two possibilities influencing the wiring diagram:

- R1 assigned to "Operating State Fault":
  - The line contactor is controlled by Power ON and Power OFF push buttons and relay R1. Relay R1 is activated when the soft starter is powered up (minimum CL1/CL2 control) and is deactivated when an error is detected and the motor switches to freewheel mode.
- R1 assigned to "Line Contactor":
  - The line contactor is controlled by relay R1 on the basis of the ATS480 RUN and STOP commands. Relay R1 is activated by a RUN command (or a preheating command). It is deactivated at the end of braking or deceleration, or when the motor switches to freewheel mode after a STOP command. It is also deactivated when an error is detected: the motor switches to freewheel mode at this point.

***Note**: ATS48 and ATS480 control supply voltage may differ, check the value in the installation guide before starting the system.*

Thermal monitoring

The Altivar Soft Starter ATS480 will help to protect the motor and the cables against overloads. If this monitoring function is disabled, external thermal monitoring must be provided.

Altivar Soft Starter ATS480

Soft starters for asynchronous motors

Type 1 coordination according to IEC 60947-4-1 and IEC 60947-4-2

230 V power supply, ATS480 connected in-line

Motor power	Combination	ATS480		Circuit breaker *(1)*	Line contactor *(2)*	Bypass contactor *(2)*
kW	Iq (kA)	Class 10 Normal duty	Class 20 Heavy duty	Q1 reference	KM1 reference	KM3 reference
3	50	–	ATS480D17Y	GV2L20	LC1D18●●	LC1D18●●
4	50	ATS480D17Y	ATS480D22Y	GV2L20	LC1D18●●	LC1D18●●
5.5	50	ATS480D22Y	ATS480D32Y	GV2L22	LC1D25●●	LC1D25●●
7.5	50	ATS480D32Y	ATS480D38Y	GV2L32	LC1D32●●	LC1D32●●
9	50	ATS480D38Y	ATS480D47Y	GV3L40	LC1D38●●	LC1D38●●
11	50	ATS480D47Y	ATS480D62Y	GV3L65	LC1D50A●●	LC1D50A●●
15	50	ATS480D62Y	ATS480D75Y	GV3L65	LC1D65A●●	LC1D65A●●
18.5	50	ATS480D75Y	ATS480D88Y	GV4L80B	LC1D80●●	LC1D80●●
22	50	ATS480D88Y	ATS480C11Y	GV4L115B	LC1D115●●	LC1D115●●
30	50	ATS480C11Y	ATS480C14Y	GV4L115B	LC1D115●●	LC1D115●●
37	50	ATS480C14Y	ATS480C17Y	NSX160F MA	LC1D150●●	LC1D150●●
45	50	ATS480C17Y	ATS480C21Y	NSX250F MA	LC1G185●●●●	LC1G185●●●●
55	50	ATS480C21Y	ATS480C25Y	NSX250F MA	LC1G225●●●●	LC1G225●●●●
75	50	ATS480C25Y	ATS480C32Y	NSX400N MicroLogic 1.3 M	LC1G265●●●●	LC1G265●●●●
90	50	ATS480C32Y	ATS480C41Y	NSX400N MicroLogic 1.3 M	LC1G330●●●●	LC1G330●●●●
110	70	ATS480C41Y	ATS480C48Y	NSX630N MicroLogic 1.3 M	LC1G400●●●●	LC1G400●●●●
132	70	ATS480C48Y	ATS480C59Y	NSX630N MicroLogic 1.3 M	LC1G500●●●●	LC1G500●●●●
160	70	ATS480C59Y	ATS480C66Y	NS630bN MicroLogic 5.0 LR Off	LC1G630●●●●	LC1G630●●●●
200	70	ATS480C66Y	ATS480C79Y	NS800N MicroLogic 5.0 LR Off	LC1G630●●●●	LC1G630●●●●
220	70	ATS480C79Y	ATS480M10Y	NS800N MicroLogic 5.0 LR Off	LC1G800●●●●	LC1G800●●●●
250	70	ATS480M10Y	ATS480M12Y	NS1000N MicroLogic 5.0 LR Off	LC1F1000●●	LC1F1000●●
355	42	ATS480M12Y	–	NS1250N MicroLogic 5.0 LR Off	LC1F2600●●	LC1F2600●●

230 V power supply, ATS480 connected inside delta

Motor power	Combination	ATS480		Circuit breaker *(1)*	Line contactor *(2)*	Bypass contactor *(2)*
kW	Iq (kA)	Class 10 Normal duty	Class 20 Heavy duty	Q1 reference	KM1 reference	KM3 reference
5.5	50	–	ATS480D17Y	GV2L22	LC1D25●●	LC1D25●●
7.5	50	ATS480D17Y	ATS480D22Y	GV2L32	LC1D32●●	LC1D32●●
9	50	ATS480D22Y	ATS480D32Y	GV3L40	LC1D38●●	LC1D38●●
15	50	ATS480D32Y	ATS480D38Y	GV3L65	LC1D65A●●	LC1D65A●●
18.5	50	ATS480D38Y	ATS480D47Y	GV4L80B	LC1D80●●	LC1D80●●
22	50	ATS480D47Y	ATS480D62Y	GV4L115B	LC1D115●●	LC1D115●●
30	50	ATS480D62Y	ATS480D75Y	GV4L115B	LC1D115●●	LC1D115●●
37	50	ATS480D75Y	ATS480D88Y	NSX160F MA	LC1D150●●	LC1D150●●
45	50	ATS480D88Y	ATS480C11Y	NSX250F MA	LC1G185●●●●	LC1G185●●●●
55	50	ATS480C11Y	ATS480C14Y	NSX250F MA	LC1G225●●●●	LC1G225●●●●
75	50	ATS480C14Y	ATS480C17Y	NSX400N MicroLogic 1.3 M	LC1G265●●●●	LC1G265●●●●
90	50	ATS480C17Y	ATS480C21Y	NSX400N MicroLogic 1.3 M	LC1G330●●●●	LC1G330●●●●
110	70	ATS480C21Y	ATS480C25Y	NSX630N MicroLogic 1.3 M	LC1G400●●●●	LC1G400●●●●
132	70	ATS480C25Y	ATS480C32Y	NSX630N MicroLogic 1.3 M	LC1G500●●●●	LC1G500●●●●
160	70	ATS480C32Y	ATS480C41Y	NS630bN MicroLogic 5.0 LR Off	LC1G630●●●●	LC1G630●●●●
220	70	ATS480C41Y	ATS480C48Y	NS800N MicroLogic 5.0 LR Off	LC1G800●●●●	LC1G800●●●●
250	70	ATS480C48Y	ATS480C59Y	NS1000N MicroLogic 5.0 LR Off	LC1F1000●●	LC1F1000●●
355	42	ATS480C79Y	ATS480M10Y	NS1250N MicroLogic 5.0 LR Off	LC1F2600●●	LC1F2600●●

(1) Set Irm current of the circuit breaker (when available) to a minimum of six times the current rating of the soft starter.
(2) Replace with the appropriate control circuit voltage code (refer to page 44). ATS48 and ATS480 control supply voltage may differ, check the value in the installation guide before starting the system.

Altivar Soft Starter ATS480

Soft starters for asynchronous motors

Type 1 coordination according to IEC 60947-4-1 and IEC 60947-4-2

380/400/415 V power supply, ATS480 connected in-line

Motor power	Combination	ATS480		Circuit breaker *(1)*	Line contactor *(2)*	Bypass contactor *(2)*
kW	Iq (kA)	Class 10 Normal duty	Class 20 Heavy duty	Q1 reference	KM1 reference	KM3 reference
5.5	50	–	ATS480D17Y	GV2L20	LC1D18●●	LC1D18●●
7.5	50	ATS480D17Y	ATS480D22Y	GV2L20	LC1D18●●	LC1D18●●
11	50	ATS480D22Y	ATS480D32Y	GV2L22	LC1D25●●	LC1D25●●
15	50	ATS480D32Y	ATS480D38Y	GV2L32	LC1D32●●	LC1D32●●
18.5	50	ATS480D38Y	ATS480D47Y	GV3L40	LC1D38●●	LC1D38●●
22	50	ATS480D47Y	ATS480D62Y	GV3L65	LC1D50A●●	LC1D50A●●
30	50	ATS480D62Y	ATS480D75Y	GV3L65	LC1D65A●●	LC1D65A●●
37	50	ATS480D75Y	ATS480D88Y	GV4L80N	LC1D80●●	LC1D80●●
45	50	ATS480D88Y	ATS480C11Y	NSX100N MA	LC1D115●●	LC1D115●●
55	50	ATS480C11Y	ATS480C14Y	NSX160N MA	LC1D115●●	LC1D115●●
75	50	ATS480C14Y	ATS480C17Y	NSX160N MA	LC1D150●●	LC1D150●●
90	50	ATS480C17Y	ATS480C21Y	NSX250N MA	LC1G185●●●●	LC1G185●●●●
110	50	ATS480C21Y	ATS480C25Y	NSX250N MA	LC1G225●●●●	LC1G225●●●●
132	50	ATS480C25Y	ATS480C32Y	NSX400N MicroLogic 1.3 M	LC1G265●●●●	LC1G265●●●●
160	50	ATS480C32Y	ATS480C41Y	NSX400N MicroLogic 1.3 M	LC1G330●●●●	LC1G330●●●●
220	70	ATS480C41Y	ATS480C48Y	NSX630H MicroLogic 1.3 M	LC1G500●●●●	LC1G500●●●●
250	70	ATS480C48Y	ATS480C59Y	NSX630H MicroLogic 1.3 M	LC1G500●●●●	LC1G500●●●●
315	70	ATS480C59Y	ATS480C66Y	NS630bH MicroLogic 5.0 LR Off	LC1G630●●●●	LC1G630●●●●
355	70	ATS480C66Y	ATS480C79Y	NS800H MicroLogic 5.0 LR Off	LC1G630●●●●	LC1G630●●●●
400	70	ATS480C79Y	ATS480M10Y	NS800H MicroLogic 5.0 LR Off	LC1G800●●●●	LC1G800●●●●
500	70	ATS480M10Y	ATS480M12Y	NS1000H MicroLogic 5.0 LR Off	LC1F1000●●	LC1F1000●●
630	42	ATS480M12Y	–	NS1250H MicroLogic 5.0 LR Off	LC1F2600●●	LC1F2600●●

380/400/415 V power supply, ATS480 connected inside delta

Motor power	Combination	ATS480		Circuit breaker *(1)*	Line contactor *(2)*	Bypass contactor *(2)*
kW	Iq (kA)	Class 10 Normal duty	Class 20 Heavy duty	Q1 reference	KM1 reference	KM3 reference
11	50	–	ATS480D17Y	GV2L22	LC1D25●●	LC1D25●●
15	50	ATS480D17Y	ATS480D22Y	GV2L32	LC1D32●●	LC1D32●●
18.5	50	ATS480D22Y	ATS480D32Y	GV3L40	LC1D38●●	LC1D38●●
22	50	ATS480D32Y	ATS480D38Y	GV3L65	LC1D50A●●	LC1D50A●●
30	50	ATS480D38Y	ATS480D47Y	GV3L65	LC1D65A●●	LC1D65A●●
45	50	ATS480D47Y	ATS480D62Y	NSX100N MA	LC1D115●●	LC1D115●●
55	50	ATS480D62Y	ATS480D75Y	NSX160N MA	LC1D115●●	LC1D115●●
55	50	ATS480D75Y	ATS480D88Y	NSX160N MA	LC1D115●●	LC1D115●●
75	50	ATS480D88Y	ATS480C11Y	NSX160N MA	LC1D150●●	LC1D150●●
90	50	ATS480C11Y	ATS480C14Y	NSX250N MA	LC1G185●●●●	LC1G185●●●●
110	50	ATS480C14Y	ATS480C17Y	NSX250N MA	LC1G225●●●●	LC1G225●●●●
132	50	ATS480C17Y	ATS480C21Y	NSX400N MicroLogic 1.3 M	LC1G265●●●●	LC1G265●●●●
160	50	ATS480C21Y	ATS480C25Y	NSX400N MicroLogic 1.3 M	LC1G330●●●●	LC1G330●●●●
220	70	ATS480C25Y	ATS480C32Y	NSX630H MicroLogic 1.3 M	LC1G500●●●●	LC1G500●●●●
250	70	ATS480C32Y	ATS480C41Y	NSX630H MicroLogic 1.3 M	LC1G500●●●●	LC1G500●●●●
315	70	ATS480C41Y	ATS480C48Y	NS630bH MicroLogic 5.0 LR Off	LC1G630●●●●	LC1G630●●●●
355	70	ATS480C48Y	ATS480C59Y	NS800H MicroLogic 5.0 LR Off	LC1G630●●●●	LC1G630●●●●
400	70	ATS480C59Y	ATS480C66Y	NS800H MicroLogic 5.0 LR Off	LC1G800●●●●	LC1G800●●●●
500	70	ATS480C66Y	ATS480C79Y	NS1000H MicroLogic 5.0 LR Off	LC1F1000●●	LC1F1000●●
630	42	ATS480C79Y	ATS480M10Y	NS1250H MicroLogic 5.0 LR Off	LC1F2600●●	LC1F2600●●

(1) Set Irm current of the circuit breaker (when available) to a minimum of six times the current rating of the soft starter.
(2) Replace with the appropriate control circuit voltage code (refer to page 44). ATS48 and ATS480 control supply voltage may differ, check the value in the installation guide before starting the system.

Altivar Soft Starter ATS480

Soft starters for asynchronous motors
Type 1 coordination according to IEC 60947-4-1 and IEC 60947-4-2

440 V power supply, ATS480 connected in-line

Motor power	Combination	ATS480		Circuit breaker *(1)*	Line contactor *(2)*	Bypass contactor *(2)*
kW	Iq (kA)	Class 10 Normal duty	Class 20 Heavy duty	Q1 reference	KM1 reference	KM3 reference
5.5	50	–	ATS480D17Y	GV4L25N	LC1D12●●	LC1D12●●
7.5	50	ATS480D17Y	ATS480D22Y	GV4L25N	LC1D18●●	LC1D18●●
11	50	ATS480D22Y	ATS480D32Y	GV4L25N	LC1D25●●	LC1D25●●
15	50	ATS480D32Y	ATS480D38Y	GV4L50N	LC1D40A●●	LC1D40A●●
18.5	50	ATS480D38Y	ATS480D47Y	GV4L50N	LC1D40A●●	LC1D40A●●
22	50	ATS480D47Y	ATS480D62Y	GV4L50N	LC1D40A●●	LC1D40A●●
30	50	ATS480D62Y	ATS480D75Y	GV4L80N	LC1D65A●●	LC1D65A●●
37	50	ATS480D75Y	ATS480D88Y	GV4L80N	LC1D65A●●	LC1D65A●●
45	50	ATS480D88Y	ATS480C11Y	GV4L80N	LC1D80●●	LC1D80●●
55	50	ATS480C11Y	ATS480C14Y	GV4L115N	LC1D115●●	LC1D115●●
75	50	ATS480C14Y	ATS480C17Y	NSX160N MA	LC1D150●●	LC1D150●●
90	50	ATS480C17Y	ATS480C21Y	NSX250N MA	LC1G150●●●●	LC1G150●●●●
110	50	ATS480C21Y	ATS480C25Y	NSX250N MA	LC1G185●●●●	LC1G185●●●●
132	50	ATS480C25Y	ATS480C32Y	NSX250N MA	LC1G225●●●●	LC1G225●●●●
160	50	ATS480C32Y	ATS480C41Y	NSX400H MicroLogic 1.3 M	LC1G265●●●●	LC1G265●●●●
220	70	ATS480C41Y	ATS480C48Y	NSX630S MicroLogic1.3 M	LC1G400●●●●	LC1G400●●●●
250	70	ATS480C48Y	ATS480C59Y	NSX630S MicroLogic 1.3 M	LC1G400●●●●	LC1G400●●●●
355	70	ATS480C59Y	ATS480C66Y	NS630bL MicroLogic 5.0 LR Off	LC1G630●●●●	LC1G630●●●●
400	70	ATS480C66Y	ATS480C79Y	NS630bL MicroLogic 5.0 LR Off	LC1G630●●●●	LC1G630●●●●
500	70	ATS480C79Y	ATS480M10Y	NS800L MicroLogic 5.0 LR Off	LC1G800●●●●	LC1G800●●●●
630	70	ATS480M10Y	ATS480M12Y	NS1000L MicroLogic 5.0 LR Off	LC1F1000●●	LC1F1000●●
710	42	ATS480M12Y	–	NS1250H MicroLogic 5.0 LR Off	LC1F2600●●	LC1F2600●●

500 V power supply, ATS480 connected in-line

Motor power	Combination	ATS480		Circuit breaker *(1)*	Line contactor *(2)*	Bypass contactor *(2)*
kW	Iq (kA)	Class 10 Normal duty	Class 20 Heavy duty	Q1 reference	KM1 reference	KM3 reference
7.5	50	–	ATS480D17Y	NSX100H MA	LC1D40A●●	LC1D40A●●
9	50	ATS480D17Y	ATS480D22Y	NSX100H MA	LC1D40A●●	LC1D40A●●
11	50	ATS480D22Y	ATS480D32Y	NSX100H MA	LC1D40A●●	LC1D40A●●
18.5	50	ATS480D32Y	ATS480D38Y	NSX100H MA	LC1D40A●●	LC1D40A●●
22	50	ATS480D38Y	ATS480D47Y	NSX100H MA	LC1D50A●●	LC1D50A●●
30	50	ATS480D47Y	ATS480D62Y	NSX100H MA	LC1D50A●●	LC1D50A●●
37	50	ATS480D62Y	ATS480D75Y	NSX100H MA	LC1D65A●●	LC1D65A●●
45	50	ATS480D75Y	ATS480D88Y	NSX100H MA	LC1D80●●	LC1D80●●
55	50	ATS480D88Y	ATS480C11Y	NSX100H MA	LC1D80●●	LC1D80●●
75	50	ATS480C11Y	ATS480C14Y	NSX160H MA	LC1D150●●	LC1D150●●
90	50	ATS480C14Y	ATS480C17Y	NSX160H MA	LC1D150●●	LC1D150●●
110	50	ATS480C17Y	ATS480C21Y	NSX250H MA	LC1G185●●●●	LC1G185●●●●
132	50	ATS480C21Y	ATS480C25Y	NSX250H MA	LC1G225●●●●	LC1G225●●●●
160	50	ATS480C25Y	ATS480C32Y	NSX400H MicroLogic 1.3 M	LC1G265●●●●	LC1G265●●●●
220	50	ATS480C32Y	ATS480C41Y	NSX630H MicroLogic 1.3 M	LC1G400●●●●	LC1G400●●●●
250	70	ATS480C41Y	ATS480C48Y	NSX630L MicroLogic 1.3 M	LC1G400●●●●	LC1G400●●●●
315	70	ATS480C48Y	ATS480C59Y	NSX630L MicroLogic 1.3 M	LC1G500●●●●	LC1G500●●●●
400	70	ATS480C59Y	ATS480C66Y	NS630bL MicroLogic 5.0 LR Off	LC1G800●●●●	LC1G800●●●●
450	70	ATS480C66Y	ATS480C79Y	NS800L MicroLogic 5.0 LR Off	LC1G800●●●●	LC1G800●●●●
500	42	ATS480C79Y	ATS480M10Y	NS800L MicroLogic 5.0 LR Off	LC1F2600●●	LC1F2600●●
630	42	ATS480M10Y	ATS480M12Y	NS1000L MicroLogic 5.0 LR Off	LC1F2600●●	LC1F2600●●
800	42	ATS480M12Y	–	NS1250H MicroLogic 5.0 LR Off	LC1F2600●●	LC1F2600●●

(1) Set Irm current of the circuit breaker (when available) to a minimum of six times the current rating of the soft starter.
(2) Replace with the appropriate control circuit voltage code (refer to page 44). ATS48 and ATS480 control supply voltage may differ, check the value in the installation guide before starting the system.

Altivar Soft Starter ATS480

Soft starters for asynchronous motors

Type 1 coordination according to IEC 60947-4-1 and IEC 60947-4-2

690 V power supply, ATS480 connected in-line

Motor power	Combination	ATS480		Circuit breaker *(1)*	Line contactor *(2)*	Bypass contactor *(2)*
kW	Iq (kA)	Class 10 Normal duty	Class 20 Heavy duty	Q1 reference	KM1 reference	KM3 reference
11	50	–	ATS480D17Y	NSX100HB1 MA	LC1D40A●●	LC1D40A●●
15	50	ATS480D17Y	ATS480D22Y	NSX100HB1 MA	LC1D40A●●	LC1D40A●●
18.5	50	ATS480D22Y	ATS480D32Y	NSX100HB1 MA	LC1D40A●●	LC1D40A●●
22	50	ATS480D32Y	ATS480D38Y	NSX100HB1 MA	LC1D40A●●	LC1D40A●●
30	50	ATS480D38Y	ATS480D47Y	NSX100HB1 MA	LC1D40A●●	LC1D40A●●
37	50	ATS480D47Y	ATS480D62Y	NSX100HB1 MA	LC1D65A●●	LC1D65A●●
45	50	ATS480D62Y	ATS480D75Y	NSX100HB1 MA	LC1D80●●	LC1D80●●
55	50	ATS480D75Y	ATS480D88Y	NSX100HB1 MA	LC1D115●●	LC1D115●●
75	50	ATS480D88Y	ATS480C11Y	NSX100HB1 MA	LC1D115●●	LC1D115●●
90	15	ATS480C11Y	ATS480C14Y	NSX250HB1 MA	LC1D150●●	LC1D150●●
110	15	ATS480C14Y	ATS480C17Y	NSX250HB1 MA	LC1D150●●	LC1D150●●
160	50	ATS480C17Y	ATS480C21Y	NSX250HB1 MA	LC1G225●●●●	LC1G225●●●●
200	50	ATS480C21Y	ATS480C25Y	NSX400HB1 MicroLogic 1.3 M	LC1G265●●●●	LC1G265●●●●
250	50	ATS480C25Y	ATS480C32Y	NSX400HB1 MicroLogic 1.3 M	LC1G330●●●●	LC1G330●●●●
315	50	ATS480C32Y	ATS480C41Y	NSX630HB1 MicroLogic 1.3 M	LC1G400●●●●	LC1G400●●●●
400	70	ATS480C41Y	ATS480C48Y	NSX630HB1 MicroLogic 1.3 M	LC1G630●●●●	LC1G630●●●●
500	70	ATS480C48Y	ATS480C59Y	NS630bLB MicroLogic 5.0 LR Off	LC1G630●●●●	LC1G630●●●●
560	70	ATS480C59Y	ATS480C66Y	NS630bLB MicroLogic 5.0 LR Off	LC1G800●●●●	LC1G800●●●●
630	42	ATS480C66Y	ATS480C79Y	NS800LB MicroLogic 5.0 LR Off	LC1F2600●●	LC1F2600●●
710	42	ATS480C79Y	ATS480M10Y	NS800LB MicroLogic 5.0 LR Off	LC1F2600●●	LC1F2600●●
900	42	ATS480M10Y	ATS480M12Y	NS1000H MicroLogic 5.0 LR Off	LC1F2600●●	LC1F2600●●
950	42	ATS480M12Y	–	NS1250H MicroLogic 5.0 LR Off	LC1F2600●●	LC1F2600●●

(1) Set Irm current of the circuit breaker (when available) to a minimum of six times the current rating of the soft starter.
(2) Replace with the appropriate control circuit voltage code (refer to page 44). ATS48 and ATS480 control supply voltage may differ, check the value in the installation guide before starting the system.

Altivar Soft Starter ATS480

Soft starters for asynchronous motors

Type 2 coordination according to IEC 60947-4-1 and IEC 60947-4-2

230 V power supply, ATS480 connected in-line

Motor power	Iq	ATS480		Circuit breaker *(1)*	Line contactor Bypass contactor *(2)*	Fast-acting fuses with microswitch		Fuse disconnector
kW	(kA)	Class 10 Normal duty	Class 20 Heavy duty	Q1 reference	KM1, KM3 reference	FU reference	Size	
3	50	–	ATS480D17Y	GV2L20	LC1D25●●	DF3ER50	14 x 51	GK1EK
4	50	ATS480D17Y	ATS480D22Y	GV2L20	LC1D25●●	DF3ER50	14 x 51	GK1EK
5.5	50	ATS480D22Y	ATS480D32Y	GV2L22	LC1D25●●	DF3FR80	22 x 58	GS1JD3
7.5	50	ATS480D32Y	ATS480D38Y	GV2L32 + GV1L3	LC1D32●●	DF3FR80	22 x 58	GS1JD3
9	35	ATS480D38Y	ATS480D47Y	GV3L40	LC1D80●●	DF3FR100	22 x 58	GS1JD3
11	35	ATS480D47Y	ATS480D62Y	GV3L65	LC1D80●●	DF3FR100	22 x 58	GS1JD3
15	50	ATS480D62Y	ATS480D75Y	GV4L80B	LC1D65A●●	DF400125	00	GS1KKD3
18.5	50	ATS480D75Y	ATS480D88Y	GV4L80B	LC1D80●●	DF400125	00	GS1KKD3
22	50	ATS480D88Y	ATS480C11Y	GV4L115B	LC1D115●●	DF400160	00	GS1LLD3
30	50	ATS480C11Y	ATS480C14Y	GV4L115B	LC1D115●●	DF400160	00	–
37	50	ATS480C14Y	ATS480C17Y	NSX160F MA	LC1D150●●	DF430400	30	–
45	50	ATS480C17Y	ATS480C21Y	NSX250F MA	LC1G185●●●●	DF430400	30	–
55	50	ATS480C21Y	ATS480C25Y	NSX250F MA	LC1G225●●●●	DF431700	31	–
75	50	ATS480C25Y	ATS480C32Y	NSX400F MicroLogic 1.3 M	LC1G265●●●●	DF431700	31	–
90	50	ATS480C32Y	ATS480C41Y	NSX400F MicroLogic 1.3 M	LC1G330●●●●	DF431700	31	–
110	50	ATS480C41Y	ATS480C48Y	NSX630F MicroLogic 1.3 M	LC1G400●●●●	DF433800	33	–
132	50	ATS480C48Y	ATS480C59Y	NSX630F MicroLogic 1.3 M	LC1G500●●●●	DF4331000	33	–
160	50	ATS480C59Y	ATS480C66Y	NS630bN MicroLogic 5.0 LR Off	LC1G630●●●●	DF4331000	33	–
200	50	ATS480C66Y	ATS480C79Y	NS800N MicroLogic 5.0 LR Off	LC1G630●●●●	DF42331400	2 x 33	–
220	50	ATS480C79Y	ATS480M10Y	NS800N MicroLogic 5.0 LR Off	LC1G800●●●●	DF4441600	44	–
250	85	ATS480M10Y	ATS480M12Y	NS1000N MicroLogic 5.0 LR Off	LC1F1000●●	DF4442200	44	–
355	85	ATS480M12Y	–	NS1250N MicroLogic 5.0 LR Off	LC1F2600●● *(3)*	DF4442200	44	–

230 V power supply, ATS480 connected inside delta

Motor power	Iq	ATS480		Circuit breaker *(1)*	Line contactor Bypass contactor *(2)*	Fast-acting fuses		Fuse-disconnector
kW	(kA)	Class 10 Normal duty	Class 20 Heavy duty	Q1 reference	KM1, KM3 reference	FU reference	Size	
5.5	50	–	ATS480D17Y	GV2L22	LC1D25●●	DF3ER50	14 x 51	GK1EK
7.5	50	ATS480D17Y	ATS480D22Y	GV2L32 + GV1L3	LC1D32●●	DF3ER50	14 x 51	GK1EK
9	35	ATS480D22Y	ATS480D32Y	GV3L40	LC1D80●●	DF3FR80	22 x 58	GS1JD3
15	50	ATS480D32Y	ATS480D38Y	GV4L80B	LC1D65A●●	DF3FR80	22 x 58	GS1JD3
18.5	50	ATS480D38Y	ATS480D47Y	GV4L80B	LC1D80●●	DF3FR100	22 x 58	GS1JD3
22	50	ATS480D47Y	ATS480D62Y	GV4L115B	LC1D115●●	DF3FR100	22 x 58	GS1JD3
30	50	ATS480D62Y	ATS480D75Y	GV4L115B	LC1D115●●	DF400125	00	GS1KKD3
37	50	ATS480D75Y	ATS480D88Y	NSX160F MA	LC1D150●●	DF400125	00	GS1KKD3
45	50	ATS480D88Y	ATS480C11Y	NSX250F MA	LC1G185●●●●	DF400160	00	GS1LLD3
55	50	ATS480C11Y	ATS480C14Y	NSX250F MA	LC1G225●●●●	DF400160	00	–
75	50	ATS480C14Y	ATS480C17Y	NSX400F MicroLogic 1.3 M	LC1G265●●●●	DF430400	30	–
90	50	ATS480C17Y	ATS480C21Y	NSX400F MicroLogic 1.3 M	LC1G330●●●●	DF430400	30	–
110	50	ATS480C21Y	ATS480C25Y	NSX630F MicroLogic 1.3 M	LC1G400●●●●	DF431700	31	–
132	50	ATS480C25Y	ATS480C32Y	NSX630F MicroLogic 1.3 M	LC1G500●●●●	DF431700	31	–
160	50	ATS480C32Y	ATS480C41Y	NS630bN MicroLogic 5.0 LR Off	LC1G630●●●●	DF431700	31	–
220	50	ATS480C41Y	ATS480C48Y	NS800N MicroLogic 5.0 LR Off	LC1G800●●●●	DF433800	43	–
250	85	ATS480C48Y	ATS480C59Y	NS1000N MicroLogic 5.0 LR Off	LC1F1000●●	DF4331000	43	–
355	85	ATS480C79Y	ATS480M10Y	NS1250N MicroLogic 5.0 LR Off	LC1F2600●● *(3)*	DF4442200	44	–

(1) Set Irm current of the circuit breaker (when available) to a minimum of six times the current rating of the soft starter.
(2) Replace with the appropriate control circuit voltage code (refer to page 44). ATS48 and ATS480 control supply voltage may differ, check the value in the installation guide before starting the system.
(3) Type 2 coordination is only possible if the fast-acting fuses remain in the motor supply circuit and are not bypassed at the end of starting.

Altivar Soft Starter ATS480

Soft starters for asynchronous motors

Type 2 coordination according to IEC 60947-4-1 and IEC 60947-4-2

380/400/415 V power supply, ATS480 connected in-line

Motor power	Iq	ATS480		Circuit breaker *(1)*	Line contactor Bypass contactor *(2)*	Fast-acting fuses		Fuse-disconnector
kW	(kA)	Class 10 Normal duty	Class 20 Heavy duty	Q1 reference	KM1, KM3 reference	FU reference	Size	
5.5	50	–	ATS480D17Y	GV2L20	LC1D25●●	DF3ER50	14 x 51	GK1EK
7.5	50	ATS480D17Y	ATS480D22Y	GV2L20	LC1D25●●	DF3ER50	14 x 51	GK1EK
11	40	ATS480D22Y	ATS480D32Y	GV2L22	LC1D25●●	DF3FR80	22 x 58	GS1JD3
15	40	ATS480D32Y	ATS480D38Y	GV2L32 + GV1L3	LC1D32●●	DF3FR80	22 x 58	GS1JD3
18.5	40	ATS480D38Y	ATS480D47Y	GV3L40	LC1D50A●●	DF3FR100	22 x 58	GS1JD3
22	40	ATS480D47Y	ATS480D62Y	GV3L50	LC1D50A●●	DF3FR100	22 x 58	GS1JD3
30	50	ATS480D62Y	ATS480D75Y	GV3L65	LC1D65A●●	DF400125	00	GS1KKD3
37	50	ATS480D75Y	ATS480D88Y	GV4L80N	LC1D80●●	DF400125	00	GS1KKD3
45	50	ATS480D88Y	ATS480C11Y	GV4L115N	LC1D115●●	DF400160	00	GS1LLD3
55	50	ATS480C11Y	ATS480C14Y	GV4L115N	LC1D115●●	DF400160	00	–
75	50	ATS480C14Y	ATS480C17Y	NSX160N MA	LC1D150●●	DF430400	30	–
90	50	ATS480C17Y	ATS480C21Y	NSX250N MA	LC1G185●●●●	DF430400	30	–
110	50	ATS480C21Y	ATS480C25Y	NSX250N MA	LC1G225●●●●	DF431700	31	–
132	50	ATS480C25Y	ATS480C32Y	NSX400N MicroLogic 1.3 M	LC1G265●●●●	DF431700	31	–
160	50	ATS480C32Y	ATS480C41Y	NSX400N MicroLogic 1.3 M	LC1G330●●●●	DF431700	31	–
220	50	ATS480C41Y	ATS480C48Y	NSX630N MicroLogic 1.3 M	LC1G500●●●●	DF433800	33	–
250	50	ATS480C48Y	ATS480C59Y	NSX630N MicroLogic 1.3 M	LC1G500●●●●	DF4331000	33	–
315	50	ATS480C59Y	ATS480C66Y	NS630bN MicroLogic 5.0 LR Off	LC1G630●●●●	DF4331000	33	–
355	50	ATS480C66Y	ATS480C79Y	NS800N MicroLogic 5.0 LR Off	LC1G630●●●●	DF42331400	2 x 33	–
400	50	ATS480C79Y	ATS480M10Y	NS800N MicroLogic 5.0 LR Off	LC1G800●●●●	DF4441600	44	–
500	85	ATS480M10Y	ATS480M12Y	NS1000N MicroLogic 5.0 LR Off	LC1F1000●●	DF4442200	44	–
630	85	ATS480M12Y	–	NS1250N MicroLogic 5.0 LR Off	LC1F2600●● *(3)*	DF4442200	44	–

380/400/415 V power supply, ATS480 connected inside delta

Motor power	Iq	ATS480		Circuit breaker *(1)*	Line contactor Bypass contactor *(2)*	Fast-acting fuses		Fuse-disconnector
kW	(kA)	Class 10 Normal duty	Class 20 Heavy duty	Q1 reference	KM1, KM3 reference	FU reference	Size	
11	40	–	ATS480D17Y	GV2L22	LC1D25●●	DF3ER50	14 x 51	GK1EK
15	40	ATS480D17Y	ATS480D22Y	GV2L32 + GV1L3	LC1D32●●	DF3ER50	14 x 51	GK1EK
18.5	40	ATS480D22Y	ATS480D32Y	GV3L40	LC1D50A●●	DF3FR80	22 x 58	GS1JD3
22	40	ATS480D32Y	ATS480D38Y	GV3L50	LC1D50A●●	DF3FR80	22 x 58	GS1JD3
30	50	ATS480D38Y	ATS480D47Y	GV3L65	LC1D65A●●	DF3FR100	22 x 58	GS1JD3
45	50	ATS480D47Y	ATS480D62Y	GV4L115N	LC1D115●●	DF3FR100	22 x 58	GS1JD3
55	50	ATS480D62Y	ATS480D75Y	GV4L115N	LC1D115●●	DF400125	00	GS1KKD3
55	50	ATS480D75Y	ATS480D88Y	GV4L115N	LC1D115●●	DF400125	00	GS1KKD3
75	50	ATS480D88Y	ATS480C11Y	NSX160N MA	LC1D150●●	DF400160	00	GS1LLD3
90	50	ATS480C11Y	ATS480C14Y	NSX250N MA	LC1G185●●●●	DF400160	00	–
110	50	ATS480C14Y	ATS480C17Y	NSX250N MA	LC1G225●●●●	DF430400	30	–
132	50	ATS480C17Y	ATS480C21Y	NSX400N MicroLogic 1.3 M	LC1G265●●●●	DF430400	30	–
160	50	ATS480C21Y	ATS480C25Y	NSX400N MicroLogic 1.3 M	LC1G330●●●●	DF431700	31	–
220	50	ATS480C25Y	ATS480C32Y	NSX630N MicroLogic 1.3 M	LC1G500●●●●	DF431700	31	–
250	50	ATS480C32Y	ATS480C41Y	NSX630N MicroLogic 1.3 M	LC1G500●●●●	DF431700	31	–
315	50	ATS480C41Y	ATS480C48Y	NS630bN MicroLogic 5.0 LR Off	LC1G630●●●●	DF433800	33	–
355	50	ATS480C48Y	ATS480C59Y	NS800N MicroLogic 5.0 LR Off	LC1G630●●●●	DF4331000	33	–
400	50	ATS480C59Y	ATS480C66Y	NS800N MicroLogic 5.0 LR Off	LC1G800●●●●	DF4331000	33	–
500	50	ATS480C66Y	ATS480C79Y	NS1000N MicroLogic 5.0 LR Off	LC1F1000●●	DF42331400	2 x 33	–
630	85	ATS480C79Y	ATS480M10Y	NS1250N MicroLogic 5.0 LR Off	LC1F2600●● *(3)*	DF4442200	44	–

(1) Set Irm current of the circuit breaker (when available) to a minimum of six times the current rating of the soft starter.
(2) Replace with the appropriate control circuit voltage code (refer to page 44). ATS48 and ATS480 control supply voltage may differ, check the value in the installation guide before starting the system.
(3) Type 2 coordination is only possible if the fast-acting fuses remain in the motor supply circuit and are not bypassed at the end of starting.

Altivar Soft Starter ATS480

Soft starters for asynchronous motors
Type 2 coordination according to IEC 60947-4-1 and IEC 60947-4-2

440 V power supply, ATS480 connected in-line

Motor power	Iq	ATS480		Circuit breaker *(1)*	Line contactor Bypass contactor *(2)*	Fast-acting fuses		Fuse-disconnector
kW	(kA)	Class 10 Normal duty	Class 20 Heavy duty	Q1 reference	KM1, KM3 reference	FU reference	Size	
5.5	50	–	ATS480D17Y	GV4L25N	LC1D65A●●	DF3ER50	14 x 51	GK1EK
7.5	50	ATS480D17Y	ATS480D22Y	GV4L25N	LC1D65A●●	DF3ER50	14 x 51	GK1EK
11	20	ATS480D22Y	ATS480D32Y	GV4L25N	LC1D65A●●	DF3FR80	22 x 58	GS1JD3
15	20	ATS480D32Y	ATS480D38Y	GV4L50N	LC1D65A●●	DF3FR80	22 x 58	GS1JD3
18.5	20	ATS480D38Y	ATS480D47Y	GV4L50N	LC1D65A●●	DF3FR100	22 x 58	GS1JD3
22	20	ATS480D47Y	ATS480D62Y	GV4L50N	LC1D65A●●	DF3FR100	22 x 58	GS1JD3
30	50	ATS480D62Y	ATS480D75Y	GV4L80N	LC1D65A●●	DF400125	00	GS1KKD3
37	50	ATS480D75Y	ATS480D88Y	GV4L80N	LC1D65A●●	DF400125	00	GS1KKD3
45	40	ATS480D88Y	ATS480C11Y	GV4L80N	LC1D80●●	DF400160	00	GS1LLD3
55	40	ATS480C11Y	ATS480C14Y	GV4L115N	LC1D115●●	DF400160	00	–
75	50	ATS480C14Y	ATS480C17Y	NSX160N MA	LC1D150●●	DF430400	30	–
90	50	ATS480C17Y	ATS480C21Y	NSX250N MA	LC1G150●●●●	DF430400	30	–
110	50	ATS480C21Y	ATS480C25Y	NSX250N MA	LC1G185●●●●	DF431700	31	–
132	50	ATS480C25Y	ATS480C32Y	NSX400 MA	LC1G225●●●●	DF431700	31	–
160	50	ATS480C32Y	ATS480C41Y	NSX400N MicroLogic 1.3 M	LC1G265●●●●	DF431700	31	–
220	50	ATS480C41Y	ATS480C48Y	NSX630H MicroLogic 1.3 M	LC1G400●●●●	DF433800	33	–
250	50	ATS480C48Y	ATS480C59Y	NSX630H MicroLogic 1.3 M	LC1G400●●●●	DF4331000	33	–
355	50	ATS480C59Y	ATS480C66Y	NS630bN MicroLogic 5.0 LR Off	LC1G630●●●●	DF4331000	33	–
400	50	ATS480C66Y	ATS480C79Y	NS800N MicroLogic 5.0 LR Off	LC1G630●●●●	DF42331400	2 x 33	–
500	50	ATS480C79Y	ATS480M10Y	NS800N MicroLogic 5.0 LR Off	LC1G800●●●●	DF4441600	44	–
630	85	ATS480M10Y	ATS480M12Y	NS1000N MicroLogic 5.0 LR Off	LC1F1000●●	DF4442200	44	–
710	85	ATS480M12Y	–	NS1250N MicroLogic 5.0 LR Off	LC1F2600●● *(3)*	DF4442200	44	–

500 V power supply, ATS480 connected in-line

Motor power	Iq	ATS480		Circuit breaker *(1)*	Line contactor Bypass contactor *(2)*	Fast-acting fuses		Fuse-disconnector
kW	(kA)	Class 10 Normal duty	Class 20 Heavy duty	Q1 reference	KM1, KM3 reference	FU reference	Size	
7.5	50	–	ATS480D17Y	GV2L20 + LA9LB920	LC1D25●●	DF3ER50	14 x 51	GK1EK
9	50	ATS480D17Y	ATS480D22Y	GV2L20 + LA9LB920	LC1D25●●	DF3ER50	14 x 51	GK1EK
11	20	ATS480D22Y	ATS480D32Y	GV2L20 + LA9LB920	LC1D25●●	DF3FR80	22 x 58	GS1JD3
18.5	20	ATS480D32Y	ATS480D38Y	GV2L32 + LA9LB920	LC1D25●●	DF3FR80	22 x 58	GS1JD3
22	20	ATS480D38Y	ATS480D47Y	NSX100H MA	LC1D80●●	DF3FR100	22 x 58	GS1JD3
30	20	ATS480D47Y	ATS480D62Y	NSX100H MA	LC1D80●●	DF3FR100	22 x 58	GS1JD3
37	50	ATS480D62Y	ATS480D75Y	NSX100H MA	LC1D150●●	DF400125	00	GS1KKD3
45	50	ATS480D75Y	ATS480D88Y	NSX100H MA	LC1D150●●	DF400125	00	GS1KKD3
55	40	ATS480D88Y	ATS480C11Y	NSX100H MA	LC1D150●●	DF400160	00	GS1LLD3
75	50	ATS480C11Y	ATS480C14Y	NSX160H MA	LC1D150●●	DF400160	00	–
90	50	ATS480C14Y	ATS480C17Y	NSX160H MA	LC1G185●●●●	DF430400	30	–
110	50	ATS480C17Y	ATS480C21Y	NSX160H MA	LC1G185●●●●	DF430400	30	–
132	50	ATS480C21Y	ATS480C25Y	NSX250H MA	LC1G225●●●●	DF431700	31	–
160	50	ATS480C25Y	ATS480C32Y	NSX400H MicroLogic 1.3 M	LC1G265●●●●	DF431700	31	–
220	50	ATS480C32Y	ATS480C41Y	NSX400H MicroLogic 1.3 M	LC1G400●●●●	DF431700	31	–
250	40	ATS480C41Y	ATS480C48Y	NSX630H MicroLogic 1.3 M	LC1G400●●●●	DF433800	33	–
315	50	ATS480C48Y	ATS480C59Y	NSX630H MicroLogic 1.3 M	LC1G500●●●●	DF4331000	33	–
400	50	ATS480C59Y	ATS480C66Y	NS630bH MicroLogic 5.0 LR Off	LC1G800●●●●	DF4331000	33	–
450	50	ATS480C66Y	ATS480C79Y	NS800H MicroLogic 5.0 LR Off	LC1G800●●●●	DF42331400	2 x 33	–
500	50	ATS480C79Y	ATS480M10Y	NS800H MicroLogic 5.0 LR Off	LC1F1000●●	DF4441600	44	–
630	85	ATS480M10Y	ATS480M12Y	NS1000H MicroLogic 5.0 LR Off	LC1F2600●● *(3)*	DF4442200	44	–
800	85	ATS480M12Y	–	NS1250H MicroLogic 5.0 LR Off	LC1F2600●● *(3)*	DF4442200	44	–

(1) Set Irm current of the circuit breaker (when available) to a minimum of six times the current rating of the soft starter.
(2) Replace with the appropriate control circuit voltage code (refer to page 44). ATS48 and ATS480 control supply voltage may differ, check the value in the installation guide before starting the system.
(3) Type 2 coordination is only possible if the fast-acting fuses remain in the motor supply circuit and are not bypassed at the end of starting.

Altivar Soft Starter ATS480

Soft starters for asynchronous motors

Type 2 coordination according to IEC 60947-4-1 and IEC 60947-4-2

690 V power supply, ATS480 connected in-line

Motor power	Iq	ATS480		Circuit breaker *(1)*	Line contactor Bypass contactor *(2)*	Fast-acting fuses		Fuse-disconnector
kW	(kA)	Class 10 Normal duty	Class 20 Heavy duty	Q1 reference	KM1, KM3 reference	FU reference	Size	
11	50	–	ATS480D17Y	NSX100HB1 MA	LC1D80●●	DF3ER50	14 x 51	GK1EK
15	50	ATS480D17Y	ATS480D22Y	NSX100HB1 MA	LC1D80●●	DF3ER50	14 x 51	GK1EK
18.5	20	ATS480D22Y	ATS480D32Y	NSX100HB1 MA	LC1D80●●	DF3FR80	22 x 58	GS1JD3
22	20	ATS480D32Y	ATS480D38Y	NSX100HB1 MA	LC1D80●●	DF3FR80	22 x 58	GS1JD3
30	20	ATS480D38Y	ATS480D47Y	NSX100HB1 MA	LC1D150●●	DF3FR100	22 x 58	GS1JD3
37	20	ATS480D47Y	ATS480D62Y	NSX100HB1 MA	LC1D150●●	DF3FR100	22 x 58	GS1JD3
45	25	ATS480D62Y	ATS480D75Y	NSX100HB1 MA	LC1D150●●	DF400125	00	GS1KKD3
55	25	ATS480D75Y	ATS480D88Y	NSX100HB1 MA	LC1D150●●	DF400125	00	GS1KKD3
75	40	ATS480D88Y	ATS480C11Y	NSX100HB1 MA	LC1D150●●	DF400160	00	GS1LLD3
90	50	ATS480C11Y	ATS480C14Y	NSX250HB1 MA	LC1G185●●●●	DF400160	00	–
110	50	ATS480C14Y	ATS480C17Y	NSX250HB1 MA	LC1G225●●●●	DF430400	30	–
160	50	ATS480C17Y	ATS480C21Y	NSX250HB1 MA	LC1G225●●●●	DF430400	30	–
200	50	ATS480C21Y	ATS480C25Y	NSX250HB1 MA	LC1G265●●●●	DF431700	31	–
250	50	ATS480C25Y	ATS480C32Y	NSX400HB1 MicroLogic 1.3 M	LC1G330●●●●	DF431700	31	–
315	50	ATS480C32Y	ATS480C41Y	NSX630HB1 MicroLogic 1.3 M	LC1G400●●●●	DF431700	31	–
400	40	ATS480C41Y	ATS480C48Y	NSX630HB1 MicroLogic 1.3 M	LC1G630●●●●	DF433800	33	–
500	50	ATS480C48Y	ATS480C59Y	NS630bLB MicroLogic 5.0 LR Off	LC1G630●●●●	DF4331000	33	–
560	50	ATS480C59Y	ATS480C66Y	NS630bLB MicroLogic 5.0 LR Off	LC1G800●●●●	DF4331000	33	–
630	50	ATS480C66Y	ATS480C79Y	NS800LB MicroLogic 5.0 LR Off	LC1F2600●● *(3)*	DF42331400	2 x 33	–
710	50	ATS480C79Y	ATS480M10Y	NS800LB MicroLogic 5.0 LR Off	LC1F2600●● *(3)*	DF4441600	44	–
900	42	ATS480M10Y	ATS480M12Y	NS1000H MicroLogic 5.0 LR Off	LC1F2600●● *(3)*	DF4442200	44	–
950	42	ATS480M12Y	–	NS1250H MicroLogic 5.0 LR Off	LC1F2600●● *(3)*	DF4442200	44	–

(1) Set Irm current of the circuit breaker (when available) to a minimum of six times the current rating of the soft starter.
(2) Replace with the appropriate control circuit voltage code (refer to page 44). ATS48 and ATS480 control supply voltage may differ, check the value in the installation guide before starting the system.
(3) Type 2 coordination is only possible if the fast-acting fuses remain in the motor supply circuit and are not bypassed at the end of starting.

Altivar Soft Starter ATS480

Soft starters for asynchronous motors

Line contactor references

Line contactor reference table

Basic reference	Power supply	Control voltage code												
	AC	24	42	48	110	115	220	230	240	380	400	415	440	500
LC1D18…D150 *(1)*	50/60 Hz	B7	D7	E7	F7	FE7	M7	P7	U7	Q7	V7	N7	R7	S7
LC1D18…D65 *(2)*	50 Hz	B5	D5	E5	–	–	–	P5	–	–	–	–	–	–
LC1D80…D115	50 Hz	B5	D5	E5	F5	FE5	M5	P5	U5	Q5	V5	N5	R5	S5
LC1D80…D115	60 Hz	B6	–	E6	F6	–	M6	–	U6	Q6	–	–	R6	–
	DC	12	24	36	48	60	72	110	125	220	250	440		
LC1D18…D38 *(3)*	U 0.7…1.25 Uc	JD	BD	CD	ED	ND	SD	FD	GD	MD	UD	RD		
LC1D40A…D65A *(3)*	U 0.75…1.25 Uc	JD	*(5)*	*(5)*	*(5)*	*(5)*	*(5)*	*(5)*	*(5)*	*(5)*	*(5)*	RD		
LC1D80…D95	U 0.85…1.1 Uc	JD	BD	CD	ED	ND	SD	FD	GD	MD	UD	RD		
	U 0.75…1.2 Uc	JW	BW	CW	EW	–	SW	FW	–	MW	–	–		
LC1D115…150 *(4)*	U 0.75…1.2 Uc	–	BD	–	ED	ND	SD	FD	GD	MD	UD	RD		
	DC (low consumption)	5	12	20	24	48	110	220	250					
LC1D18…D38 *(3)*	U 0.8…1.25 Uc	AL	JL	ZL	BL	EL	FL	ML	UL					
	AC/DC (low consumption)													
LC1D18…D150	See TeSys D Green, page B8/4 of TeSys catalog													
	AC	24	48	110	115	120	208	220	230	240	380	400	415	440
LC1F1000…2600	40…400 Hz (coil LX1F)	–	–	F7	–	G7	–	M7	P7	U7	Q7	V7	N7	R7
	DC	24	48	110	125	220	230	250	400	440				
LC1F1000…2600	(coil LX4F)	–	–	FD	GD	MD	–	UD	–	RD				
	AC/DC	24…48		48…130		100…250		200…500						
LC1G150…G500		BEEA		EHEN		KUEN		LSEA						
LC1G630…G800		–		EHEN		KUEN		LSEA						

(1) D115 and D150 coils with built-in suppression as standard, by bidirectional peak limiting diode.
(2) Not available with «connection for lugs or bars».
(3) Coils with integral suppression device fitted as standard, by bidirectional peak limiting diode.
(4) Coil with built-in suppression device as standard.
(5) For these coil voltages, choose from TeSys D Green contactors. Same product reference radical, just add BBE coil voltage code for 24 V DC, BNE for 24-60 V AC/DC, EHE for 48-130 V AC/DC, KUE for 100-250 V AC/DC. Example: LC1D40ABBE

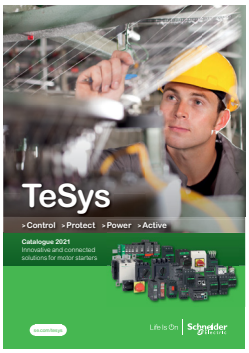

Altivar Soft Starter ATS480

Soft starters for asynchronous motors

Soft starters

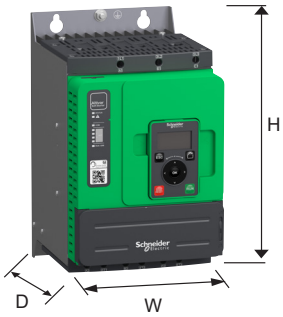

Soft starters		
Overall dimensions		
Reference	**W x H x D**	
	mm	***in.***
ATS480D17Y	160 x 275 x 203	*6.30 x 10.83 x 7.99*
ATS480D22Y	160 x 275 x 203	*6.30 x 10.83 x 7.99*
ATS480D32Y	160 x 275 x 203	*6.30 x 10.83 x 7.99*
ATS480D38Y	160 x 275 x 203	*6.30 x 10.83 x 7.99*
ATS480D47Y	160 x 275 x 203	*6.30 x 10.83 x 7.99*
ATS480D62Y	190 x 290 x 247	*7.48 x 11.42 x 9.72*
ATS480D75Y	190 x 290 x 247	*7.48 x 11.42 x 9.72*
ATS480D88Y	190 x 290 x 247	*7.48 x 11.42 x 9.72*
ATS480C11Y	190 x 290 x 247	*7.48 x 11.42 x 9.72*
ATS480C14Y	200 x 340 x 272	*7.87 x 13.39 x 10.71*
ATS480C17Y	200 x 340 x 272	*7.87 x 13.39 x 10.71*
ATS480C21Y	320 x 380 x 277	*12.60 x 14.96 x 10.91*
ATS480C25Y	320 x 380 x 277	*12.60 x 14.96 x 10.91*
ATS480C32Y	320 x 380 x 277	*12.60 x 14.96 x 10.91*
ATS480C41Y	400 x 670 x 314	*15.75 x 26.38 x 12.36*
ATS480C48Y	400 x 670 x 314	*15.75 x 26.38 x 12.36*
ATS480C59Y	400 x 670 x 314	*15.75 x 26.38 x 12.36*
ATS480C66Y	400 x 670 x 314	*15.75 x 26.38 x 12.36*
ATS480C79Y	770 x 890 x 329	*30.31 x 35.04 x 12.95*
ATS480M10Y	770 x 890 x 329	*30.31 x 35.04 x 12.95*
ATS480M12Y	770 x 890 x 329	*30.31 x 35.04 x 12.95*

Altivar Soft Starter ATS480

Soft starters for asynchronous motors

Line chokes

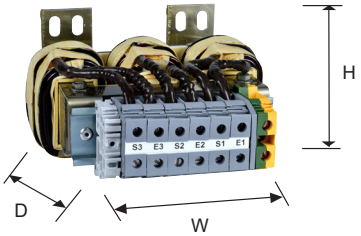

Line chokes		
Overall dimensions		
Reference	**W x H x D**	
	mm	***in.***
VZ1L015UM17T	130 x 155 x 80	*5.12 x 6.10 x 3.15*
VZ1L030U800T	155 x 170 x 120	*6.10 x 6.69 x 4.72*
VZ1L040U600T	175 x 200 x 130	*6.89 x 7.87 x 5.12*
VZ1L070U350T	180 x 200 x 150	*7.09 x 7.87 x 5.91*
VZ1L150U170T	270 x 234 x 147	*10.63 x 9.21 x 5.79*
VZ1L250U100T	270 x 237 x 190	*10.63 x 9.33 x 7.48*
VZ1L325U075T	300 x 260 x 206	*11.81 x 10.24 x 8.11*
VZ1L530U045T	380 x 415 x 225	*14.96 x 16.34 x 8.86*
VZ1LM10U024T	455 x 420 x 300	*17.91 x 16.54 x 11.81*
VZ1LM14U016T	400 x 490 x 330	*15.75 x 19.29 x 12.99*

Variable speed drives and soft starters

A whole world of Services for your drives and soft starters by Schneider Electric

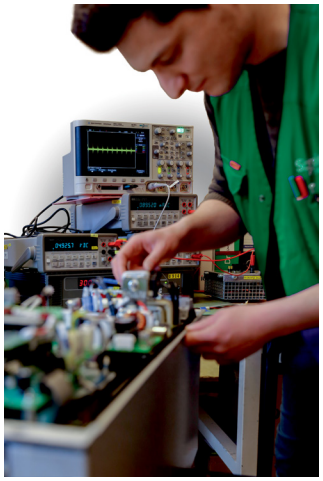

Support and services offer by Schneider Electric

Variable speed drives and soft starters are an important part of your operation, with downtime having a significant impact on your business. Protecting that investment through comprehensive services means that you can continue to deliver optimally throughout the lifecycle of your drive and soft starter. Our range of services is designed to help you get more out of your drives and soft starters, your operation, and to improve your environmental impact.

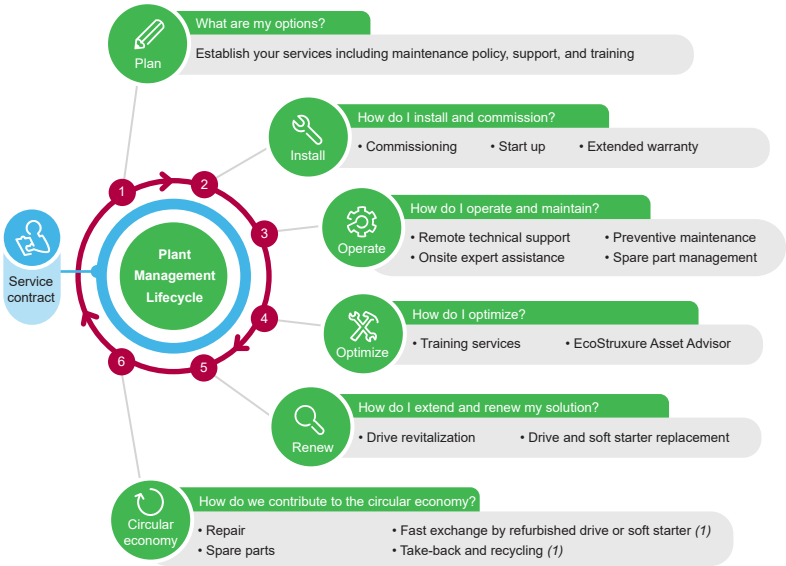

Install

- **Extended Warranty** service helps you control your maintenance costs. Schneider Electric will provide a replacement drive and soft starter or repair the product on site during a period of one or three years more than the standard warranty, in all conditions covered by the extended warranty.
- **Start-up** service is the first essential step in maintenance and optimal operational performance of the drive or soft starter. Our comprehensive review checks up to 100 parameters and is especially designed for drives and soft starters in simple applications.
- **Commissioning** service ensures a reliable start for operations with more complex applications and drive systems. The unique requirements of your process need to be carefully considered to ensure efficient operations.

Operate

- **Preventive Maintenance** service performs predetermined maintenance actions according to a product-specific schedule. The work is carried out by certified technical experts following Schneider Electric instructions. This service minimizes unplanned downtime and extends your equipment lifetime.
- **Remote Technical Support** brings you expert product assistance over the phone, email, chat, or web for any technical questions relating to your drives and soft starters, including configuration, diagnostics, and maintenance. Our global support team is multi-lingual with support available up to R&D level experts if needed.
- **On-Site Expert Assistance** service offers you highly skilled field service experts to troubleshoot and resolve drive or soft starter equipment-related matters at your site, as a back-up source of expertise for your personnel.
- **Spare Part Management** service identifies and manages your critical spare parts either on your site or offsite. This service ensures that you have access to the spares you need without having to invest in capital to maintain the stock.

(1) Services available in countries that have the right structure and capabilities.

Variable speed drives and soft starters

A whole world of Services for your drives and soft starters by Schneider Electric

Support and services offer by Schneider Electric (continued)

Optimize

- **Training** service offers eLearning, classroom, and onsite training provision to enhance the technical installation, commissioning, and maintenance competencies of your personnel. Added competence translates into further process efficiency and reliability, as well as employee satisfaction.

- **EcoStruxure Asset Advisor** service enables you to move from reactive to predictive maintenance and access actionable insight provided by the advisor. The service predicts drive- and motor-related actions through connected devices and advanced algorithms monitored by Schneider Electric's experts.

Renew

- **Drive Revitalization** is an excellent choice if you prefer to use your aging drives longer and want to extend their service life with affordable and comprehensive inspection and replacement of all critical parts.

- **Drive and soft starter replacement** involves modernizing equipment by replacing the previous aged or obsolete product with a new one matched to the purpose. The service can be extended with engineering in case the device and process requires more advanced engineering.

Circular economy

- **Spare Parts** are available from our local, regional, and global stocks. Original equipment parts from Schneider Electric are reliable and easily available. They will help to keep your product in operation for longer.

- **Repair** allows you to extend the life of your drive or soft starter. The affected product can be replaced, or repaired on site or at our repair centers, depending on the type of product in question.

- **Fast Exchange by refurbished drive or soft starter** *(1)* gives a second life to inoperative drives or soft starters. In this case, we offer an immediate exchange with a replacement refurbished drive or soft starter and take back the product, repair it, and keep it ready for the next exchange.

- **Take-back and recycling** *(1)* is the last step to improve your environmental impact. Unrepairable products are dismantled, raw materials are collected and given a second life. Up to 85% of the product components can be recycled.

Service contracts secure recovery, availability, and outcome

Service contracts manage the safety and performance of your assets through well-defined maintenance plans tailored to your operational needs. The predefined service contract – Advantage Service Plan – and fully customizable "à la carte" service contract are built from the services in the "Operate" and "Optimize" phases and service levels defining availability, response, and lead times matching your particular needs. You will enjoy priority access to Schneider Electric support when you need it, as well as having an expert partner to plan the long-term evolution of your drives and soft starters.

mySchneider app

With the mySchneider app you have easy 24/7 access to product information and expert support. All registered users have access to additional features, such as real-time notifications, order tracking, product pricing, and availability. The mySchneider app is available for download from the IOS and Android app store.

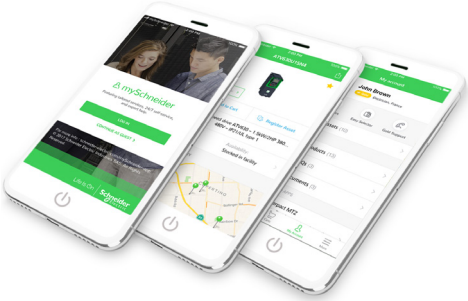

Schneider Electric – helping you succeed

Schneider Electric, the leader in digital transformation of energy management and automation, has operations in more than 100 countries. With this global footprint we have certified field service representatives, regional expert and advanced level support up to product R&D to provide you the right support across the lifecycle of your drives and soft starters. Furthermore, we offer an extensive network of local and global repair centers and a logistics chain that underpins our ability to respond to your needs.

To order services or find out more, please contact your local Schneider Electric service center.

(1) Services available in countries that have the right structure and capabilities.

Altivar Soft Starter ATS480

Soft starters for asynchronous motors

Product reference index

#

490NTC00005 29
490NTC00015 29
490NTW00002 29
490NTW00002U 29
490NTW00005 29
490NTW00005U 29
490NTW00012 29
490NTW00012U 29

A

ATS480C11Y 18
ATS480C14Y 18
ATS480C17Y 18
ATS480C21Y 18
ATS480C25Y 18
ATS480C32Y 18
ATS480C41Y 18
ATS480C48Y 18
ATS480C59Y 18
ATS480C66Y 18
ATS480C79Y 18
ATS480D17Y 18
ATS480D22Y 18
ATS480D32Y 18
ATS480D38Y 18
ATS480D47Y 18
ATS480D62Y 18
ATS480D75Y 18
ATS480D88Y 18
ATS480M10Y 18
ATS480M12Y 18

D

DF3ER50 40 41 42 43
DF3FR100 40 41 42 43
DF3FR80 40 41 42 43
DF400125 40 41 42 43
DF400160 40 41 42 43
DF42331400 40 41 42 43
DF430400 40 41 42 43
DF431700 40 41 42 43
DF4331000 40 41 42 43
DF433800 40 41 42 43
DF4441600 40 41 42 43
DF4442200 40 41 42 43

G

GK1EK 40 41 42 43
GS1JD3 40 41 42 43
GS1KKD3 40 41 42 43
GS1LLD3 40 41 42 43
GV1L3 4 40 41
GV2L20 36 37 40 41 42
GV2L22 36 37 40 41
GV2L32 36 37 40 41 42
GV3L40 36 37 40 41
GV3L50 41
GV3L65 36 37 40 41
GV4L115B 36 40
GV4L115N 38 41 42
GV4L25N 38 42
GV4L50N 38 42
GV4L80B 36 40
GV4L80N 37 38 41 42

L

LA9F702 34
LA9F703 34
LA9F704 34
LA9LB920 42
LU9AD7 31
LU9GC3 25 28

T

TCSCAR013M120 30
TCSCAR01NM120 31
TCSEGWB13W 23
TCSMCNAM3M002P 32
TCSXCNAMUM3P 25
TSXCANCA100 30
TSXCANCA300 30
TSXCANCA50 30
TSXCANCADD03 31
TSXCANCADD1 31
TSXCANCB100 30
TSXCANCB300 30
TSXCANCB50 30
TSXCANCBDD3 31
TSXCANCBDD5 31
TSXCANCD100 30
TSXCANCD300 30
TSXCANCD50 30
TSXCANKCDF180T 30
TSXCANTDM4 31

V

VW3A1104R10 23 25
VW3A1104R100 23 25
VW3A1104R30 23 25
VW3A1104R50 23 25
VW3A1105 32
VW3A1111 24
VW3A1112 25
VW3A1113 22
VW3A1114 23
VW3A3607 31
VW3A3608 30
VW3A3618 30
VW3A3628 31
VW3A3720 29
VW3A8127 32
VW3A8306R 28
VW3A8306R03 25 28
VW3A8306R10 25 28
VW3A8306R30 25 28
VW3A8306RC 25 28
VW3A8306TF03 25 28
VW3A8306TF10 25 28
VW3CANCARR03 30
VW3CANCARR1 30
VW3CANTAP2 31
VX4G4801 21
VY1G480C01 21
VY1G480M01 21
VZ1L015UM17T 33
VZ1L030U800T 33
VZ1L040U600T 33
VZ1L070U350T 33
VZ1L150U170T 33
VZ1L250U100T 33
VZ1L325U075T 33
VZ1L530U045T 33
VZ1LM10U024T 33
VZ1LM14U016T 33
VZ3V481 21
VZ3V4811 21
VZ3V482 21
VZ3V483 21
VZ3V484 21
VZ3V485 21
VZ3V485 21

Z

ZB5AZ905 23 25

Legal information

The information provided in this Catalog contains description of Schneider Electric products, solutions and services ("Offer") with technical specifications and technical characteristics of the performance of the corresponding Offer.

The content of this document is subject to revision at any time without notice due to continued progress in methodology, design and manufacturing.

To the extent permitted by applicable law, no responsibility or liability is assumed by Schneider Electric and its subsidiaries for any type of damages arising out of or in connection with (i) informational content of this Catalog not conforming with or exceeding the technical specifications, or (ii) any error contained in this Catalog, or (iii) any use, decision, act or omission made or taken on basis of or in reliance on any information contained or referred to in this Catalog.

SCHNEIDER ELECTRIC MAKES NO WARRANTY OR REPRESENTATION OF ANY KIND, WHETHER EXPRESS OR IMPLIED, AS TO WHETHER THIS CATALOG OR ANY INFORMATION CONTAINED THEREIN SUCH AS PRODUCTS AND SERVICES WILL MEET REQUIREMENTS, EXPECTATIONS OR PURPOSE OF ANY PERSON MAKING USE THEREOF.

Schneider Electric brand and any trademarks of Schneider Electric and its subsidiaries referred to in this Catalog are property of Schneider Electric or its subsidiaries. All other brands are trademarks of their respective owners.

This Catalog and its content are protected under applicable copyright laws and provided for informative use only. No part of this Catalog may be reproduced or transmitted in any form or by any means (electronic, mechanical, photocopying, recording, or otherwise), for any purpose, without the prior written permission of Schneider Electric.

Copyright, intellectual, and all other proprietary rights in the content of this Catalog (including but not limited to software, audio, video, text, and photographs) rests with Schneider Electric or its licensors. All rights in such content not expressly granted herein are reserved. No rights of any kind are licensed or assigned or shall otherwise pass to persons accessing this information.

Life Is On | Schneider Electric

Life Is On | Schneider Electric

Learn more about our products at www.se.com

The information provided in this documentation contains general descriptions and/or technical characteristics of the performance of the products contained herein. This documentation is not intended as a substitute for and is not to be used for determining suitability or reliability of these products for specific user applications. It is the duty of any such user or integrator to perform the appropriate and complete risk analysis, evaluation and testing of the products with respect to the relevant specific application or use thereof. Neither Schneider Electric nor any of its affiliates or subsidiaries shall be responsible or liable for misuse of the information contained herein.

Design: Schneider Electric
Photos: Schneider Electric

Schneider Electric Industries SAS
Head Office
35, rue Joseph Monier - CS 30323
F-92500 Rueil-Malmaison Cedex
France

DIA2ED2210602EN
September 2024 - V1.2

Catalog | December 2024

Altivar Soft Starter ATS430

Soft starters for standard machines in industry from 4 to 400 kW/3 to 500 HP

www.se.com

Life Is On | Schneider Electric

Quick access to product information

Get technical information about your product

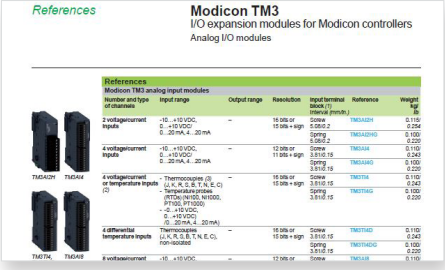

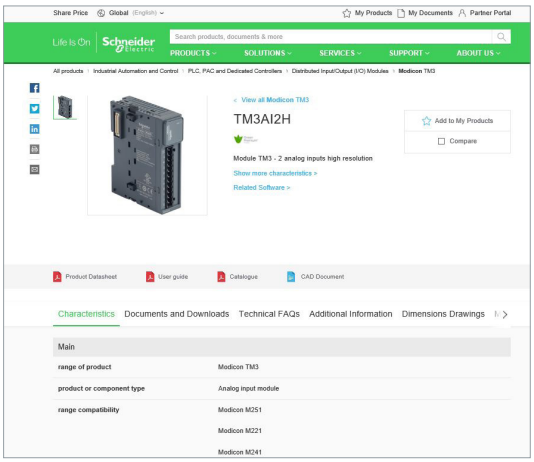

Each commercial reference presented in a catalog contains a hyperlink. Click on it to obtain the technical information of the product:

- Characteristics, Dimensions and drawings, Mounting and clearance, Connections and schemas, Performance curves
- Product image, Instruction sheet, User guide, Product certifications, End of life manual

Find your catalog

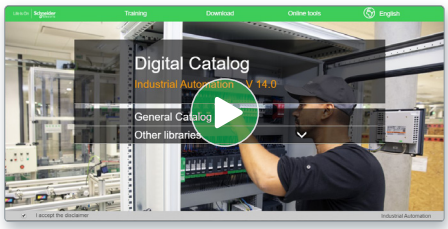

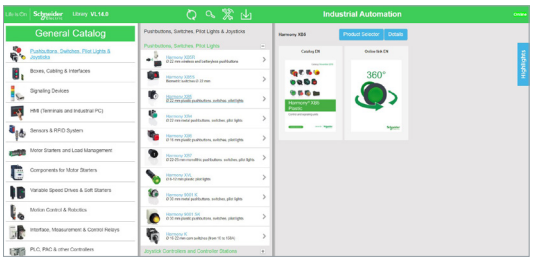

> With just 3 clicks, you can access the Industrial Automation and Control catalogs, in both English and French
> Consult digital automation catalogs at Digi-Cat Online

- Up-to-date catalogs
- Embedded product selectors, 360° pictures
- Optimized search by commercial references

Select your training

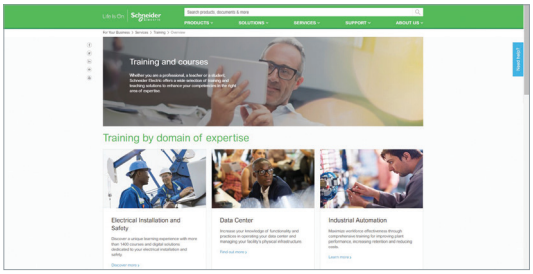

> Find the right Training for your needs on our Global website
> Locate the training center with the selector tool, using this link

Life Is On | Schneider Electric

mySchneider, your personalized digital experience

Access an all-in-one customized online experience and benefit from tailored business services, resources, and tools to efficiently support your business operations.

- **Efficiency:** In just a few clicks, find all the information and support you need to get the job done.
- **Simplicity:** Use a single login to access all business services, in one place, available 24/7. You no longer need to log in to multiple platforms.
- **Personalization:** Benefit from content, tools, and business services tailored to your activity, and customize your landing page based on your preferences.

Watch the How-to Videos

Order management

> Select Products and Add to Cart
> Check for Products' Price and Availability
> Order Products with Generic Commercial References

Product information

> Find a Product Data Sheet and Related Documents
> Select Products and Add to Cart
> Stay Up to Date on the Status of My Products

Support

> Get Quicker Answers Thanks to Online Support

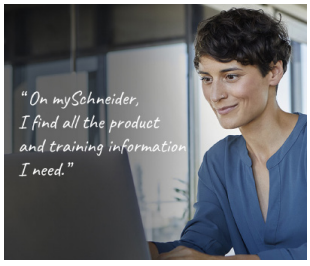

Training

> Access Trainings Dedicated to My Activity

Create your account

Life Is On | Schneider Electric

Digital tools to quickly select your soft starter solution

Product selector for ATS430

- Easy selection of the ATS430 commercial reference
- Expand it with options and accessories
- Get the Bill of Material in standard format
- Drop it into the product cart
- Access technical information and documentation

Scan or click on the QR code

EcoStruxure™ Motor Control Configurator

- From your application, select your soft starter reference
- Expand it with coordinated combination, options, and accessories
- Convert into Bill of Material, add the product to the cart
- Directly access product documentation
- Save, rework, share your solution with unique ID

Scan or click on the QR code

EcoStruxure™ Motor Management Design

- From your project, perform electrical design calculation
- Compare direct-on-line, soft starter, and variable speed drive
- Verify starting feasibility from mechanical standpoint
- Verify that power factor and harmonics levels objectives are met
- Build a complete Motor Management solution: circuit breakers, soft starters, drives, contactors, MCC panels, power quality monitoring
- Get a summary report with calculations and recommended offers

Scan or click on the QR code

Life Is On | Schneider Electric

Altivar

Discover Altivar

Variable speed drives and soft starters

Improve your energy efficiency and sustainability with Altivar variable speed drives and soft starters. Manage motor control applications up to 20 MW with products ranging from compact products to custom-engineered solutions. Our connected devices offer built-in intelligence to improve operational efficiency, availability, and functional safety in various application areas, such as industrial processes, machines, or buildings.

Explore our offer

- Altivar Process
- Altivar Machine
- Altivar Building
- Altivar Soft Starters

Life Is On | Schneider Electric

Environmental Data Program

Enhance sustainability with Altivar™ Soft Starter ATS430

Superior environmental performance thanks to high durability

Altivar™ Soft Starter ATS430 is **RoHS** and **REACH** compliant
- Transparent environment information
- Life Cycle Analysis, compliant with ISO 14025
- Circularity profile

Altivar Soft Starter ATS430 brings key benefits to help you achieve superior sustainability thanks to high-durability performance:

- by increasing the reliability of the system to maximize process continuity and operations
- by allowing hardware and firmware upgradability to extend the service life of the equipment and keep it up to date
- by providing repairability and diagnostics to minimize downtime

Durability = Reliability + Upgradability + Repairability

Benefits

- Maximize machine uptime
- Best-in-class motor control
- Reduce overall cost thanks to embedded functions
- Enhance sustainability
- Optimize time from design to operation

Altivar™ Soft Starter ATS430 is designed for high-durability performance

Visit the Altivar Soft Starter ATS430 web pages on se.com to access environmental data

Reliability

The Altivar Soft Starter ATS430 has been designed to deliver enhanced reliability to withstand high stress, whatever the origin - whether thermal mechanical, chemical, or operational - to reduce downtime.

Additionally, the ATS430 integrates cybersecurity best practices that help to protect against casual or coincidental violation.

To avoid unplanned downtime, the ATS430 also embeds condition monitoring features to detect deviation at an early stage and provide proactive condition-based maintenance.

Upgradability

You can upgrade ATS430 firmware using SoMove or EcoStruxure Automation Device Maintenance software. Available on the Schneider Electric website, the firmware is digitally signed and its authenticity is verified by the ATS430. This operation can only be performed by authorized people as defined in the cybersecurity policy.

Repairability

The Altivar Soft Starter ATS430 is designed to simplify on-site maintenance and repair processes thanks to integrated diagnostic functions, spare parts available from stock, and fast, documented replacement operations.

In addition, Schneider Electric implements a circular model, offering replacement with repaired or reconditioned products so that your asset can be put back into service quickly.

Contents

Altivar Soft Starter ATS430

Altivar Soft Starter selection guide . . . . . *page 4*

- **General presentation** ..... *page 8*
- **Altivar Soft Starter ATS430 presentation** ..... *page 12*
- **Selection criteria**
  - Selection criteria for Altivar Soft Starter ATS430 ..... *page 19*
  - Selection of ATS430 commercial reference ..... *page 20*
  - Special uses ..... *page 21*
- **ATS430 references**
  - Soft starters ..... *page 22*
  - Replacement parts ..... *page 23*
- **Configuration and runtime tools**
  - Integrated plain text display and input keys ..... *page 24*
  - Plain text display terminal and accessories ..... *page 25*
  - Graphic display terminal and accessories ..... *page 27*
  - Multidrop connection accessories ..... *page 28*
  - DTM ..... *page 29*
  - SoMove software ..... *page 29*
- **Options**
  - Soft starter/accessories and options combinations ..... *page 30*
  - Communication buses ..... *page 31*
  - Firmware update ..... *page 33*
  - Line chokes and protective covers for power terminals ..... *page 34*
- **Motor starter combinations**
  - Presentation ..... *page 35*
  - Type 1 coordination ..... *page 36*
  - Type 2 coordination ..... *page 38*
  - Line contactor reference table ..... *page 40*
- **Dimensions**
  - Soft starters ..... *page 41*
  - Line chokes ..... *page 41*

Services

- **A whole world of Services for your drives and soft starters** ..... *page 42*

Index

- **Product reference index** ..... *page 44*

EcoStruxure™
Innovation At Every Level

Schneider Electric's IoT-enabled, plug-and-play, open, secure, interoperable architecture and platform, in Industries, Infrastructures, Data Centers, and Buildings.

Innovation at every level

EcoStruxure is based on a three-tiered technology stack delivering innovation at every level, from connected products to edge control and apps, analytics, and services.

Together with our hybrid segments approach, this enhances your value around safety, reliability, operational efficiency, sustainability, and connectivity across 6 domains of expertise:

- Power
- IT
- Building
- Machine
- Plant
- Grid

Dedicated architectures and IoT

We tailor our solutions in the form of dedicated reference architectures for plants:

- Management systems
- Power systems
- Data center systems
- Industrial plant and machine systems
- Smart grid systems

The Industrial Internet of Things (IIoT) gives an additional boost to technologies. That's why we provide our customers with an IoT-enabled architecture and platform offering simple, reliable, productive, and cost-efficient solutions.

Cybersecurity solutions

Robust cybersecurity protection is a must, and Schneider Electric's solutions can deliver it, regardless of business type or industry.

The vendor-agnostic services provided by our skilled professionals help to protect your entire critical infrastructure. We help to assess your risk, implement cyber-specific solutions, and maintain your onsite defenses over time, while integrating appropriate IT policies and requirements.

This is our difference and your advantage.

Enhanced safety

With the release of M580 Safety, Schneider Electric further expands the EcoStruxure platform.

This consolidates our position as one of the most trusted industrial safety vendor, with thousands of Modicon and Triconex safety systems protecting the most critical industrial processes globally.

EcoStruxure™ Innovation At Every Level for Industry

*The Schneider Electric industrial software business and AVEVA have merged to trade as AVEVA Group plc, a UK listed company. The Schneider Electric and Life is On trademarks are owned by Schneider Electric and are being licensed to AVEVA by Schneider Electric.

Altivar Soft Starter

Soft starters for asynchronous motors

Altivar Soft Starter ranges

Market segments			**Simple machines**			**Industrial machines**		
Applications			**Simple starting**	**Simple starting and stopping**		**Controlled starting and stopping of pumps, fans, compressors, agitators, mixers, conveyors**	**Simple starting and stopping of pumps and fans**	
Operational voltage range Ue (V)			**110…480**	**200…480**	**200…480**	**208...600**	**230…440**	**208…600**
Operational current range Ie (A)			**3…25**	**6…32**	**38…105**	**17...590**	**17…590**	**17…590**
Power range	**For 50…60 Hz line supply (kW/*HP*)**		**0.37…11/*0.5…15***	**0.75…15/*1…20***	**11…55/*10…75***	**4...400/*3...500***	**4…355**	**4…400/*3…500***
	Single-phase	110…230 V (kW)	0.37…2.2	–				
	Three-phase	200…240 V (kW/*HP*)	–	0.75…7.5/*1…10*	–			
		200…480 V (kW/*HP*)	0.37…11/*0.5…15*	–				
		208 V (*HP*)	–		10…30	3...150	–	*3…150*
		230…240 V (kW/*HP*)	–		11…30/*10…40*	4...160/*5...200*	4…160/–	4…160/*5…200*
		380…440 V (kW)	1.1…11	1.5…15	18.5…55	7.5...355	7.5…355	7.5…355
		460…480 V (*HP*)	*0.5…15*	*2…20*	*25…75*	10...400	–	*10…400*
		500…525 V (kW)	–			9...400	–	9…400
		575 V (*HP*)	–			15...500	–	*15…500*
Motor control	Operating cycle		–		Normal duty			
	Current limiting		–			500% current rating (700% rated motor current)	350% current rating	
	Boost		–		Yes		–	
	Type of control		Configurable voltage ramp			Torque control (TCS = Torque Control System), voltage control	Configurable voltage ramp	
	Deceleration		Voltage ramp			Torque ramp, voltage ramp	Voltage ramp	
	Braking		–					
	Number of controlled phases		1	2			3	
	Connection inside the motor delta		–				Yes	–
	Bypass		Integrated					
Functions	Thermal protection		External			Electronic embedded, or with PTC 1/3 resistors in series, 2 wires	Electronic embedded, or with PTC	
	Other protections		–		Soft starter overheating	Underload, overload, motor phase loss, line phase inversion, motor phase inversion, excessive acceleration time, current overload, ground leakage, undervoltage, overvoltage, unbalance, time before restart.	Underload, overload, motor phase loss, line phase inversion, excessive acceleration time, current overload, ground leakage	
	Safety functions		–					
	Cybersecurity		–			Yes	–	
	Condition monitoring		–			Energy, power consumption, power quality Soft starter: fan(s), bypass relays	Energy, power consumption	
	Application functions		–			Preheating, smoke extraction, voltage boost	Second motor set, voltage boost	
Communication	Embedded		–			Modbus serial link (RJ45), Modbus serial link (open style)	Modbus serial link	
	Option modules		–					
Configuration and runtime tools			2 potentiometers	3 potentiometers		Integrated plain text display terminal, graphic display terminal (optional), DTM (device type manager), SoMove software	7-segment display, SoMove software	
Number of I/O	Analog inputs		–			PTC 1/3 resistors in series, 2 wires	1 PTC probe	
	Digital inputs		–	3		4	3	
	Analog outputs		–			1	–	
	Digital outputs		–	1		–		
	Relay outputs		–	1		2	2	
Standards and certifications			IEC/EN 60947-4-2 CE, UL, CSA, C-Tick, CCC		IEC/EN 60947-4-2 CE, CCC, UKCA, EAC, RCM	IEC/EN 60947-4-2, EMC class A, CE, cULus, UKCA, RCM, CCC, REACH, RoHS	IEC/EN 60947-4-2, EMC class A CE, UL, CSA, C-Tick, GOST, CCC	
References			**ATS01N1●●●●**	**ATS01N2●●●●**	**ATS130N2●●●LT**	**ATS430●●●S6**	**ATS22●●●Q**	**ATS22●●●S6●**

Altivar Soft Starter

Soft starters for asynchronous motors

Altivar Soft Starter ranges

Market segments			**Process and infrastructure, demanding machines**	
Applications			**Controlled starting and stopping of pumps, fans, compressors, agitators, mixers, grinders, crushers, refiners, conveyors, lifting screws, presses**	
Operational voltage range Ue (V)			**208…690**	
Operational current range Ie (A)			**17…1,200**	
Power range	**For 50…60 Hz line supply (kW/*HP*)**		**4…900/*3…1,200***	
	Three-phase	208 V (*HP*)	*3…400*	
		230…240 V (kW/*HP*)	4…355/*5…450*	
		380…440 V (kW)	7.5…710	
		460…480 V (*HP*)	*10…1,000*	
		500…525 V (kW)	9…800	
		575 V (*HP*)	*15…1,200*	
		660…690 V (kW)	11…900	
Motor control	Operating cycle		Normal duty and heavy duty	
	Current limiting		500% current rating (700% rated motor current)	
	Boost		Yes	
	Type of control		Torque control (TCS = Torque Control System), voltage control	
	Deceleration		Torque ramp, voltage ramp	
	Braking		Yes	
	Number of controlled phases		3	
	Connection inside the motor delta		Yes	Yes, with embedded wiring diagnostics
	Bypass		External with soft starter optimization or without bypass	Integrated
Functions	Thermal protection		Electronic embedded, with PTC, or with PT100 2/3 wires	Electronic embedded, or with PTC 1/6 resistors in series, or with PT100 2/3 wires, or with PT1000 2/3 wires, or with KTY84
	Other protections		Underload, overload, motor phase loss, line phase inversion, overcurrent,excessive acceleration time, current overload, ground leakage	Underload, overload, motor phase loss, line phase inversion, motor phase inversion, excessive acceleration time, current overload, ground leakage, undervoltage, overvoltage, mains frequency out of range
	Safety functions		–	1: embedded STO (Safe Torque Off) certified IEC 61508 SIL1, EN 13849 Cat.2 PLc
	Cybersecurity		Yes	Yes, certified IEC 62443-4-2 SL1
	Condition monitoring		Energy, power consumption	Energy, power consumption, power quality Soft starter: fan(s) and bypass relays Driven equipment: discrete Fourier transform
	Application functions		Preheating, smoke extraction, voltage boost, multimotor cascade, second motor set	Preheating, smoke extraction, voltage boost, second motor set, forward/reverse with two contactors managed by the soft starter, JOG, anti-jam, borehole pumps
Communication	Embedded		Modbus serial link	Modbus TCP, EtherNet/IP, Modbus serial link
	Option modules		Modbus TCP, EtherNet/IP, PROFIBUS DP V1, CANopen daisy chain, SUB-D, and screw terminal block	PROFIBUS DP V1, CANopen daisy chain, SUB-D, and screw terminal block
Configuration and runtime tools			Plain text display terminal, graphic display terminal (option), DTM (device type manager), SoMove software	Graphic display terminal, embedded Web server, DTM (device type manager), SoMove software
Number of I/O	Analog inputs		PTC or PT100 2/3 wires	PTC 1/6 resistors in series, PT100 2/3 wires, PT1000 2/3 wires, KTY
	Digital inputs		4	
	Analog outputs		1	
	Digital outputs		2	
	Relay outputs		3	
Standards and certifications			IEC/EN 60947-4-2, EMC class A and B CE, cULus, UKCA, CCC, RCM, KC, EAC, DNV, ABS, BV, CCS, REACH, RoHs	IEC/EN 60947-4-2, EMC class A CE, cULus, UKCA, RCM, CCC, DNV, REACH, RoHS
References			**ATS480●●●Y**	**ATS490●●●Y**

Altivar Soft Starter ATS430

Soft starters for asynchronous motors
The essential for effectiveness
Best-in-class motor control and high-durability performance

Altivar Soft Starter ATS430 range

Effective motor management

Altivar Soft Starter ATS430 is the new comprehensive range of soft starters from Schneider Electric for standard industrial machines. It provides functions for effective motor management, including operational performance, reliability, protection, integration in the automation system, and energy efficiency.

Altivar Soft Starter ATS430 had been designed to deliver:

- Best-in-class motor control
- High-durability performance to reduce downtime and extend lifespan
- Superior sustainability through energy efficiency and resources preservation
- Cost reduction at each phase of the life cycle

ATS430 covers the operational voltage range from 208 to 600 V in a single product range from 17 up to 590 A to meet the requirements of the most stringent applications in normal duty. The range embeds best practice cybersecurity functions helping to protect operations, and integrates condition monitoring of its most sensitive parts.

Best-in-class motor control

ATS430 integrates TCS, the original torque control system from Schneider Electric that helps to ensure smooth acceleration/deceleration and preserve the mechanics and hydraulics. Monitoring of the motor, application, power, and energy is built-in: all the data is available to users and the automation system.

High-durability performance

Altivar Soft Starter ATS430 is designed to help ensure operational continuity. The high-durability performance of ATS430 allows downtime and operational expenditure to be reduced and equipment lifespan to be extended. Durability encompasses:

- Reliability
- Upgradability
- Repairability

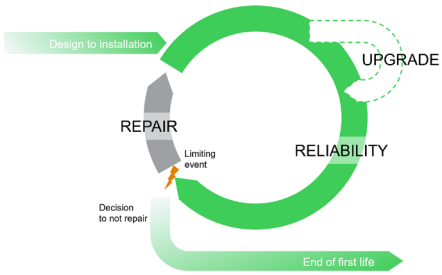

Reliability by design

ATS430 withstands high stress from several sources, whether environmental or operational. It offers enhanced robustness in terms of:

> Thermal conditions, with an extended operating ambient temperature range from -25 to 60 °C/*-13 to 140 °F* (with derating above 40 °C/*104 °F*)

> Mechanical conditions, by using a long-lasting power connection with integrated EverLink™ technology and complying with class 3M3 and class 3S3 according to IEC 60721-3-3 ed. 2002

> Chemical conditions, by complying with class 3C3 according to IEC 60721-3-3 ed. 2002 with salt mist

> Electrical conditions, thanks to a large mains voltage range from 208 to 600 V and a large mains frequency range from 50 or 60 Hz +/-20%

Torque control, the boost function, and the ATS430 starting capabilities all help to increase the withstand to stress originating from the application.

Cybersecurity best practices

As limiting events resulting in downtime can also be caused by operators, the Altivar Soft Starter ATS430 embeds best practice cybersecurity functions covering:

> User account management, including user authentication, role-based authorization, access channels, and strong passwords

> Hardening to restrict ports, functions, or services

> Threat intelligence to manage cybersecurity-related events

> Cybersecure firmware upgrade

Altivar Soft Starter ATS430

Soft starters for asynchronous motors
The essential for effectiveness
High-durability performance

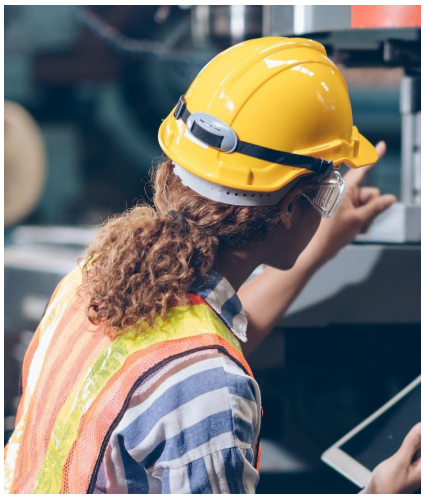

High-durability performance (continued)

Integrated condition monitoring

To avoid unplanned downtime and move to a proactive maintenance strategy, Altivar Soft Starter ATS430 embeds early detection of deviation in operation of its most sensitive parts:

- Monitoring of cooling fans based on operation time and rotation speed
- Monitoring of bypass relays based on cycle counter and life cycle rate

The operator is alerted by flashing of the associated LED on the front panel. An output relay can also be assigned to this function.

Upgradability

It is easy to extend the lifetime of the equipment with ATS430 and keep it up to date thanks to the firmware upgrade.

- Up-to-date firmware is available on the Schneider Electric website.
- A firmware upgrade can be performed directly by customers with SoMove or EcoStruxure Automation Device Maintenance software through a Modbus serial port.
- Firmware upgrades follow the cybersecurity rules in terms of authorization and authenticity.

Fan kit VZ3V4903 for ATS430C21S6...C59S6

Repairability

To reduce the mean time to repair and therefore increase machine uptime, Altivar Soft Starter ATS430 offers:

- Easy diagnostics thanks to direct access to online help via the QR code sticker on the ATS430 front panel, and use of the error code on the built-in display to open the corresponding troubleshooting documentation
- Wear parts, such as fans and control block, available with documented operations for easy replacement by the user
- Spare parts, such as bypass contactor, power board, and thyristors, for replacement by Schneider Electric after-sales service

In addition, Schneider Electric implements a circular model, offering replacement with repaired or refurbished products.

Altivar Soft Starter ATS430

Soft starters for asynchronous motors
The essential for effectiveness
Improved efficiency

Improved efficiency

Energy efficiency and management

- Efficiency higher than 99.5%
- Integrated bypass
- Power monitoring with accuracy better than 95%: active and reactive power, active and reactive energy, current, voltage, power factor
- Power quality monitoring: voltage sag, voltage and current unbalance

Energy management capabilities are provided thanks to integration in EcoStruxure Power Monitoring Expert, by combining power and energy data provided by the ATS430 and process data according to different standpoints.

High environmental performance

- Use of plastic with at least 20% bio-based content
- Use of ASI-certified aluminum for responsible production, sourcing, and material stewardship
- Packaging using recycled cardboard

Environmental Data Program

Environmental data

ATS430 meets the following requirements:

- Use of hazardous substances
  - Compliance with the European RoHS directive (2011/65/EU and 2015/863/EU) and RoHS China
  - Compliance with REACH regulation No.1907/2006 for the declaration of substances of very high concern (SVHC), authorization (Annex XIV), and restriction (Annex XVII)
- Environmental impact

  The Product Environmental Profile (PEP) is a quantitative Type III Environmental Declaration in compliance with ISO 14025 that helps to ensure appropriate reliability and transparency. Based on a Life Cycle Assessment (LCA) of the product along its whole life cycle, the document presents the different impacts, such as energy consumption, carbon footprint, consumption of raw materials, and pollution of air, water, and soil.
- End-of-Life management

  The “ATS430 End-of-life” information document in accordance with IEC 62635 guidance contains the instructions for responsible disposal of the products and maximizes recycling in a step towards a more circular economy, improving operational efficiency and reducing environmental hazards.

Please consult the Altivar Soft Starter ATS430 product pages on our website to access the environmental data of the given reference: environmental and carbon footprint data, material and substances data, energy efficiency data, lifetime extension, repacking and remanufacturing data.

Altivar Soft Starter ATS430

Soft starters for asynchronous motors
The essential for effectiveness
Contributing to overall cost reduction

Contributing to overall cost reduction

Reduce engineering time and cost

With EcoStruxure solutions, the engineering time is drastically reduced:

- It takes just two minutes to select the complete soft starter solution with EcoStruxure Motor Control Configurator: no need to be an expert
- The power architecture is optimized with EcoStruxure Motor Management Design, which analyses different solutions
- ATS430 is integrated in EcoStruxure Power Monitoring Expert for energy management
- Small motor tests can be run to check the complete sequence

Reduce the cost of the solution

Altivar Soft Starter ATS430 incorporates functions that eliminate the need to use and integrate external devices:

- No need for external instrumentation for energy management with the embedded power monitoring and power quality functions
- No need for external bypass contactor and wiring thanks to the embedded bypass relays
- Motor thermal monitoring with PTC probes
- Simple Modbus wiring through open-style terminals

Reduce your operational expenditure (OpEx)

Altivar Soft Starter ATS430 is designed to reduce the Mean Time to Repair (MTTR) and:

- Reduce your energy bill:
  - High efficiency level of ATS430 (99.5%) thanks to integrated bypass
  - Embedded power and energy monitoring and management
- Increase uptime with a high-durability device
- Reduce maintenance cost by moving from reactive maintenance to condition-based maintenance thanks to the embedded condition monitoring of the soft starter and the driven equipment
- Help protect your process integrity against casual or coincidental violations thanks to the embedded best practice cybersecurity functions

Altivar Soft Starter ATS430

Soft starters for asynchronous motors

Applications, functions, and EcoStruxure integration

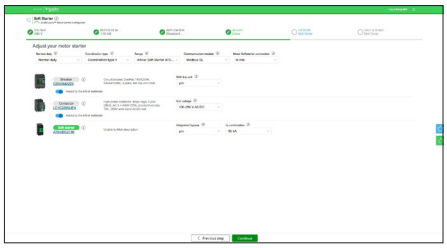

Machines for industrial applications

Altivar Soft Starter ATS430 is specifically designed to meet the requirements of normal duty applications in standard industrial machines such as:

- Centrifugal pumps
- Fans
- Screw compressors
- Centrifugal compressors
- Conveyors
- Agitators
- Mixers

The Altivar Soft Starter ATS430 range increases durability and availability of your machines, helps to ensure continuous operations, and reduces downtime thanks to its:

- Torque Control System (TCS)
- Simplicity
- Reliability
- Integrated bypass relays
- Condition monitoring functions
- Cybersecurity features
- Repairability

Functions

The Altivar Soft Starter ATS430 range masters the acceleration and deceleration of normal duty applications while reducing mechanical wear and fluid shocks in hydraulic machines.

Additional functions:

- Up to 700% motor current starting without tripping
- Boost function to override locked shaft and friction
- Motor preheating

Full set of functions to monitor:

- The motor: overload, ground fault
- The application: underload and overload, phase rotation, starting time
- The mains: phase loss, phase rotation, phase inversion

Integration in EcoStruxure software

The Altivar ATS430 soft starter is integrated in EcoStruxure software to save time and improve project efficiency with:

- EcoStruxure Motor Management Design for power architecture design and selection of the solution
- EcoStruxure Motor Control Configuration for selection of the complete motor starter solution including circuit breakers and contactors
- EcoStruxure Power Monitoring Expert for energy management using power and energy data reported by the ATS430
- EcoStruxure Architecture Builder for definition of the automation architecture and the detailed design, including the Bill of Material and quotation

Altivar Soft Starter ATS430

Soft starters for asynchronous motors

The offer

The offer

The Altivar Soft Starter ATS430 is a controller with four thyristors using the TCS (torque control system) algorithm to control acceleration, deceleration, and stopping of three-phase squirrel cage asynchronous motors up to 400 kW/*500 HP.*

- The ATS430 is a cost-effective solution designed to:
  - Reduce machine operating costs by reducing mechanical stress and improving machine availability
  - Reduce the risk of severe damage by reducing fluid shocks and improving installation availability
- Reduce the stress on the electrical distribution system by reducing line current peaks and voltage drops during motor starts
- Reduce the installation cost thanks to the integrated bypass relays
- Improve reliability of your asset thanks to embedded features such as condition monitoring and cybersecurity

Altivar Soft Starter ATS430 consists of one range only covering:
- Operational voltage from 208 to 600 V
- Operational current from 17 to 590 A
- Control power supply from 110 to 230 VAC

ATS430 integrates two Modbus serial lines as standard:
- One Modbus serial line available on an RJ45 port for:
  - Connection to configuration and firmware update software
  - Connection of a remote display terminal
  - Connection to a Modbus fieldbus
- One Modbus serial line available on open-style terminals for connection to a Modbus fieldbus

Altivar Soft Starters ATS430 has an integrated display terminal that allows the user to change the configuration and settings, or monitor parameters related to the application, motor, or soft starter.

Altivar Soft Starter ATS430

Soft starters for asynchronous motors

The offer (continued)

The offer (continued)

Reliability by design

Altivar Soft Starter ATS430 is designed for harsh environments.

- Ambient operating temperature:
  - -25...+40 °C/*-13...104 °F* without derating, up to 60 °C/*140 °F* with derating of 1% per °C above 40 °C/*104 °F*
- Relative humidity without condensing: 5...95%
- Storage and transport temperature: -40…+70 °C/*-40…+158 °F*
- Withstand to harsh environments:
  - Conforming to IEC/EN 60721-3-3 ed. 2002
    - Chemical substances class 3C3 with salt mist
    - Mechanical substances class 3S3
    - Mechanical conditions class 3M3
  - Printed circuit boards with protective coating
- Operating altitude:
  - 0…2,000 m/*0…6,562 ft* without derating
  - 2,000...4,800 m/*6,562…15,748 ft* with derating of 1% per 100 m/*328 ft*
  - Altitude also has an impact on the overvoltage category of the supply source (see the "System earthing arrangement and mains voltage" section below).

System earthing arrangement and mains voltage

To comply with IEC 60947-2, the system earthing arrangement, the mains voltage used on the ATS430 soft starter, and the altitude define the overvoltage category of the supply source.

Mains voltage	System earthing arrangement	Supply source overvoltage category, up to 4,800 m/*15,748 ft*
208…600 V	TT or TN	OVCIII
	IT or corner grounded	OVCIII

The supply source overvoltage category could be reduced by using an appropriate system such an insulation transformer.

Installation

ATS430 soft starters are intended to be mounted in a cabinet. The protection degree of the products is as follows:

- IP20 for current rating from 17 to 110 A
- IP00 for current rating from 140 to 590 A

The units rated from 140 to 590 A have unprotected power terminals. These terminals can be fitted with protective covers (see page 34) to obtain an IP20 solution. The protective covers are to be used with eyelet connections.

Electromagnetic compatibility (EMC)

Compliance with electromagnetic compatibility requirements has been incorporated into the design of the Altivar Soft Starter ATS430 to help ensure equipment meets CE marking requirements.

Conducted and radiated emissions according to IEC 60947-4-2 class A applies to the whole ATS430 range.

Certification

The Altivar Soft Starter ATS430 range has the following certifications: cULus, CE, UKCA, CCC, EAC, and RCM.

Marking: CE, cULus, CCC, RCM, EAC, and UKCA.

Altivar Soft Starter ATS430 equipped with optional protective covers

Altivar Soft Starter ATS430

Soft starters for asynchronous motors

Integrated functions

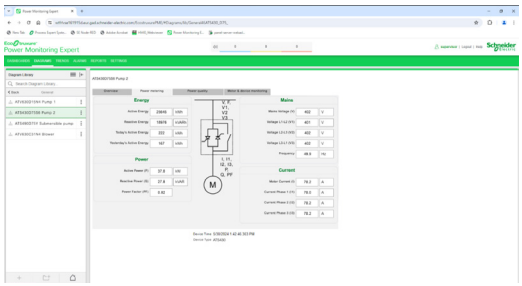

Integrated functions

The Altivar Soft Starter ATS430 includes numerous functions related to monitoring, the application, and start/stop performance, including:

- TCS, the original torque control system: constant control of the torque supplied to the motor during acceleration and deceleration phases (significantly reducing pressure surges)
- Bypassing function of the thyristors, managed by the integrated relays, at the end of a start period whilst maintaining electronic protection
- Wide frequency tolerance for generator set power supplies
- Wiring diagnostics functions: small motor test

Condition monitoring

The Altivar Soft Starter ATS430 embeds condition monitoring functions to improve uptime and reduce the maintenance cost of your assets:

- Condition monitoring of the embedded cooling fans
- Condition monitoring of the integrated bypass relays

Power and energy monitoring

The Altivar Soft Starter ATS430 is equipped with nine measuring sensors (six voltage sensors and three current sensors) with better than 95% accuracy, monitoring each phase at mains supply and motor level:

- Power metering
  - Active energy and reactive energy
  - Active power and reactive power
  - Mains voltage (global and phase-to-phase) and frequency
  - Motor current (global and per phase)
- Power quality
  - Current unbalance
  - Voltage unbalance and voltage sag

Motor and mains monitoring

- Built-in motor thermal monitoring
- Motor thermal state with connection of a PTC probe
- Time before restart
- Phase rotation
- Phase loss
- Mains loss
- Excessive starting time locked rotor
- Overloads, underloads, overcurrent, and undercurrent during continuous operation
- Main phase inversion

Application functions

- Smoke extraction
- Boost
- Torque limitation
- Motor preheating
- Forced local mode
- Automatic restart

Cybersecurity best practices for your assets

Cybersecurity best practices

Altivar Soft Starter ATS430 embeds cybersecurity features as standard. These features contribute to the enhanced protection of your machines against casual or coincidental violations from insiders, such as well-intentioned yet careless employees or contractors with no cybersecurity attack skills, which represent 60% of cyberattacks.

Cybersecurity features help to:

- ■ Enforce authorization of users through:
  - □ User profile assignment
  - □ User authentication
  - □ Administrator ability to override user authorization
  - □ Strong password
  - □ Password encrypted in a non-reversible way
  - □ Authorization managed according to channels
  - □ After-sales services authorization
- ■ Restrict and disable functions or services:
  - □ Sign-in required after a configurable period of inactivity
  - □ Prohibit or restrict the use of communication ports and related services such as protocols, I/O scanner, commissioning software
  - □ Counter brute force attacks by blocking repeat login attempts
  - □ Cybersecurity events recorded in a dedicated database
  - □ Reports include user's name, type of operation, time stamp
  - □ Alert when storage capacity is approaching
  - □ Storage capacity up to 500 logins
  - □ 10-year battery life, alert when low battery is approaching
- ■ Protect authenticity of the firmware through:
  - □ Digitally signed firmware
  - □ Cryptographic firmware keys
  - □ Original firmware stored in location
  - □ Verification of firmware validity on each power-up
  - □ Verification of operation of the ATS430 soft starter
- ■ Increase the hardening robustness of the device
  - □ After-sales services management

Cybersecurity settings can be exported from the ATS430 as an individual file that can be saved and duplicated by transfer to other ATS430 devices.

Altivar Soft Starter ATS430

Soft starters for asynchronous motors

Integration, dialog and configuration tools

Dialog interface solutions for ATS430

Integration

Embedded fieldbus protocol

- ■ Modbus serial link with RJ45 port **1**
- □ Standard Modbus
- □ Connection of configuration and runtime tools
- □ Control of the Altivar Soft Starter ATS430 in automation architectures (PLCs, IPCs, HMIs, etc.) in Modbus protocol for reading/writing data: diagnostics, supervision, and fieldbus management functions
- ■ Modbus serial link with open-style port **2**
- □ Standard Modbus
- □ Control of the Altivar Soft Starter ATS430 in automation architectures (PLCs, IPCs, HMIs, etc.) in Modbus protocol for reading/writing data: diagnostics, supervision, and fieldbus management functions

Dialog and configuration tools

The Altivar Soft Starter ATS430 is supplied as standard with a plain text display terminal and four buttons for menu navigation and incremental entry of settings integrated into the front panel of the device.
An additional removable remote terminal can be connected to the device's Modbus RJ45 serial port. This can be:

- ■ a plain text display terminal with an IP43 door mounting **3** (see page 25)
- ■ a graphic display terminal with an IP65 door mounting **4** (see page 27)

These options provide an operator interface outside the cabinet and raise the level of usable functionality.

- ■ The integrated plain text display and keys are used for:
- □ ATS430 control, adjustment, and configuration
- □ Diagnostics
- □ Displaying current values (motor, I/O, etc.), notifications, and warning messages
- ■ The optional door-mounted plain text terminal offers more services such as:
- □ Configuration storage and download
- □ Duplication of the configuration of a powered-up ATS430 onto another powered-up ATS430
- ■ The optional door-mounted graphic display terminal offers additional high-level services such as:
- □ Copying configuration files from a PC or an ATS430 in the graphic display terminal and duplicating them on other ATS430 (the soft starter must be powered-on for the duration of the duplication operation)
- □ Access to digital portal via dynamic QR code
- □ Connection to several Altivar Soft Starters using multidrop link components
- □ Enhanced remote visibility of a detected error by switching the backlight color from white to red

The Altivar Soft Starter ATS430 is supported by SoMove software, which covers all Altivar drives and soft starters.
SoMove software provides advanced functions for configuration, setup, and maintenance of the Altivar Soft Starter ATS430.

SoMove software

Altivar Soft Starter ATS430

Soft starters for asynchronous motors

Service features

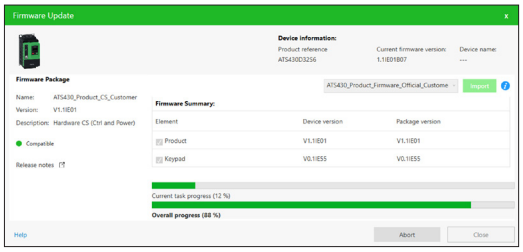

Firmware update with SoMove software

Scanning the QR code from a smartphone or tablet

Integrated service features

Altivar Soft Starter ATS430 provides built-in service features to help achieve optimum time savings:

- ■ Native simplicity to set up and start
- ■ Simplified communication with integrated Modbus serial communication
- ■ Secure firmware update:
  - □ Firmware version available on se.com from the Altivar Soft Starter ATS430 web page
  - □ Single device firmware update using SoMove
  - □ Mass firmware update deployment using EcoStruxure Automation Device Maintenance
  - □ Applying the new firmware can be automatic or manual
  - □ Applying a new version is only possible when the Altivar Soft Starter ATS430 has validated the digital signature of the firmware. If this is not the case, the ATS430 will restart on the firmware version that was previously installed.
  - □ Firmware update is available on ATS430 products and optional plain text terminal and graphic display terminal languages.

- ■ Three types of QR code are available:
  - □ QR code located on the front face of the product, to access the:
    - digital Customer Care Center application
    - product data sheet
    - ATS430 ID card and documentation
  - □ Dynamic QR code generated when an error is detected (red screen):
    - Identification of the detected error and link to a description of probable cause and possible corrective actions
  - □ Custom QR codes with links to your own support pages

Altivar Soft Starter ATS430

Soft starters for asynchronous motors

Selection criteria

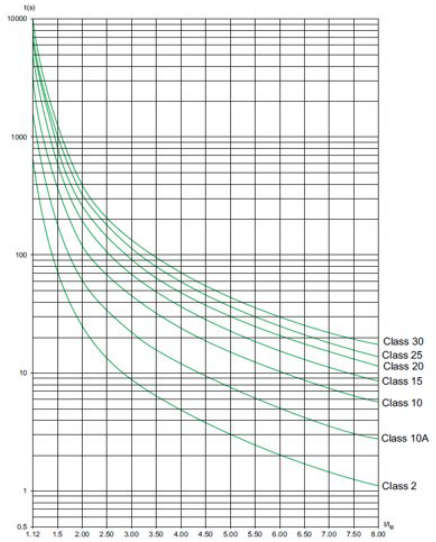

Motor thermal protection curves (from cold state)

Motor service duty S1

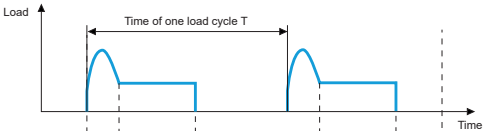

Motor service duty S4

Selection criteria for Altivar Soft Starter ATS430

- The mains voltage
- The rated motor power and rated motor current
- The type of application: normal duty

Examples of normal duty applications for Altivar ATS430 soft starter

In the table below you will find applications categorized as normal duty, which are given as examples only.

Application	Limiting current	Acceleration	Initial starting torque	Type of stop
	% of motor nominal current	Seconds	% of nominal torque	
Centrifugal pump	450	5 to 15	0	Deceleration
Submersible pump	450	Up to 2	0	Deceleration
Piston pump	525	5 to 10	30	Deceleration
Fan	450	10 to 40	0	Freewheel
Cold compressor	450	5 to 10	30	Deceleration
Screw compressor	450	3 to 20	30	Deceleration
Centrifugal compressor	450	10 to 40	0	Freewheel
Piston compressor	525	5 to 10	30	Deceleration
Conveyor, transporter	450	3 to 10	30	Deceleration
Agitator	525	5 to 20	10	Deceleration
Mixer	525	5 to 10	50	Deceleration

A normal duty application corresponds to motor protection class 10E.

Starting capabilities of ATS430 according to the service duty

From an application standpoint, the overload is defined depending on the service duty of the motor, S1 (continuous operation) or S4 (intermittent operation), according to the following table:

Service type	Overload (starting)		Service cycle	
	Overcurrent	Duration	No. of starts/h	Service factor
Normal duty				
S1	4 x In 3 x In	23 s 46 s	Continuous operation after starting	
S4	4 x In 3 x In	13 s 23 s	ATS430D17...C17S6: **10** ATS430C21...C59S6: **6**	50%

Selection of ATS430 commercial reference

Once the appropriate application has been validated based on the above elements, select the soft starter from page 22 according to the supply voltage and the motor power. Check that the rated motor current is lower than the operational current of the ATS430.
The Altivar Soft Starter ATS430 is designed to respect the above operations (see previous page) without triggering an overheat error at 40 °C/*104 °F* max. and at an altitude of 2000 m/*6562 ft*. Above those limits, the operational current of the soft starter needs to be derated as follows:

- Derating of 1% per °C above 40 °C/*104 °F* up to 60 °C/*140 °F*
- Derating of 1% per 100 m/*328 ft* up to 4,800 m/*15,748 ft*

Breakdown of ATS430 product reference:

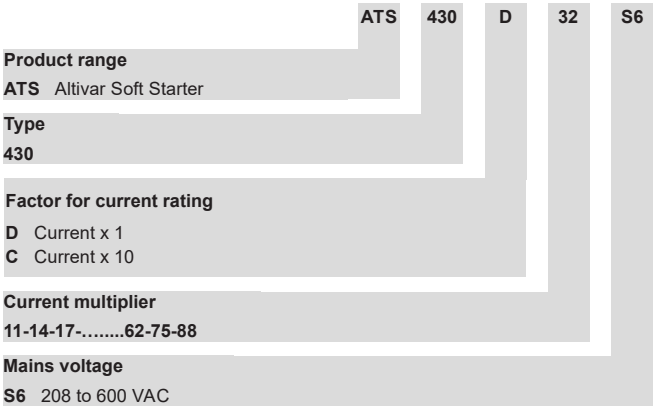

For example, for the reference ATS430C17S6, the current rating is 170 A (17 x 10).
The current rating is defined as the rated operational current in normal duty, in-line, at 40 °C/*104 °F*.

Special uses

Other use cases that influence the selection of the Altivar Soft Starter ATS430 are outlined below.

Motors in parallel

Motors may be connected in parallel provided that the power limit of the soft starter is not exceeded (the sum of the motor currents must not exceed the nominal current of the soft starter selected depending on the type of application) and that thermal protection by sensors is provided on each motor.

Brush motor

The Altivar Soft Starter ATS430 can operate with a bypassed rotor resistance motor or with a resistance lug. The starting torque is modified in accordance with the rotor resistance. If necessary, maintain a low resistance to obtain the required torque to overcome the resistive torque on starting.
A bypassed brush motor has a very low starting torque. A high stator current is required to obtain sufficient starting torque.
Select an ATS430 soft starter with a limiting current equal to or higher than seven times the motor nominal current.
Note: Check that the starting torque capability of the soft starter, equal to seven times of its rated current, is greater than the resistive torque.

Note: The ATS430 torque control enables excellent soft starting despite the limiting current being seven times the rated current required to start the motor.

Very long motor cable

Very long motor cables cause voltage drops due to the resistance of the cable. If the voltage drop is significant, it could affect the current consumption and the torque available. Therefore, this must be taken into account when selecting the motor and the soft starter.

Soft starters in parallel on the same line supply

If several soft starters are installed on the same line supply, line chokes should be installed between the transformer and the soft starter (see page 34).

Restricted use

- Do not connect the Altivar Soft Starter ATS430 inside the motor delta.
- Do not connect the ATS430 to loads other than motors (for example, transformers and resistors are not allowed).
- Do not connect power factor correction capacitors to the terminals of a motor controlled by an Altivar Soft Starter ATS430.

Altivar Soft Starter ATS430

Soft starters for asynchronous motors

Connection in-line

Motor power in kW and HP

ATS430D17S6

ATS430 in-line

Motor nameplate					ATS430				
Rated operational voltage (Ue) Rated motor power					Reference	Operational rated current (Ie)	Power loss at Ie	Power loss during starting at 4xIe	Weight
230 V	400 V	440 V	500 V	525 V					
kW	kW	kW	kW	kW		A	W	W	kg/*lb*
Normal duty applications									
4	7.5	7.5	9	9	ATS430D17S6	17	2	133	2.9/*6.4*
7.5	15	15	18.5	18.5	ATS430D32S6	32	6	281	2.9/*6.4*
11	22	22	30	30	ATS430D47S6	47	12	375	3.4/*7.5*
15	30	30	37	37	ATS430D62S6	62	6	460	6.4/*14.3*
18.5	37	37	45	45	ATS430D75S6	75	8	640	6.4/*14.3*
22	45	45	55	55	ATS430D88S6	88	11	717	6.6/*15.6*
30	55	55	75	75	ATS430C11S6	110	18	904	6.6/*15.6*
37	75	75	90	90	ATS430C14S6	140	19	1,059	8.6/*19*
45	90	90	110	110	ATS430C17S6	170	28	1,388	8.6/*19*
55	110	110	132	132	ATS430C21S6	210	35	1,763	14.6/*32.2*
75	132	132	160	160	ATS430C25S6	250	47	2,085	15.6/*34.4*
90	160	160	220	220	ATS430C32S6	320	46	2,819	16.5/*36.4*
110	220	220	250	250	ATS430C41S6	410	76	3,462	16.5/*36.4*
132	250	250	315	315	ATS430C48S6	480	81	4,551	24.5/*54*
160	315	355	400	400	ATS430C59S6	590	122	5,655	24.5/*54*

Motor nameplate				ATS430				
Rated operational voltage (Ue) Rated motor power				Reference	Operational rated current (Ie)	Power loss at Ie	Power loss during starting at 4xIe	Weight
208 V	230 V	460 V	575 V					
HP	HP	HP	HP		A	W	W	kg/*lb*
Normal duty applications								
3	5	10	15	ATS430D17S6	17	2	133	2.9/*6.4*
7.5	10	20	25	ATS430D32S6	32	6	281	2.9/*6.4*
–	15	30	40	ATS430D47S6	47	12	375	3.4/*7.5*
15	20	40	50	ATS430D62S6	62	6	460	6.4/*14.3*
20	25	50	60	ATS430D75S6	75	8	640	6.4/*14.3*
25	30	60	75	ATS430D88S6	88	11	717	6.6/*15.6*
30	40	75	100	ATS430C11S6	110	18	904	6.6/*15.6*
40	50	100	125	ATS430C14S6	140	19	1,059	8.6/*19*
50	60	125	150	ATS430C17S6	170	28	1,388	8.6/*19*
60	75	150	200	ATS430C21S6	210	35	1,763	14.6/*32.2*
75	100	200	250	ATS430C25S6	250	47	2,085	15.6/*34.4*
100	125	250	300	ATS430C32S6	320	46	2,819	16.5/*36.4*
125	150	300	350	ATS430C41S6	410	76	3,462	16.5/*36.4*
150	–	350	400	ATS430C48S6	480	81	4,551	24.5/*54*
–	200	400	500	ATS430C59S6	590	122	5,655	24.5/*54*

Altivar Soft Starter ATS430

Soft starters for asynchronous motors

Replacement parts

VZ3V4903

Replacement parts

Description	Corresponding soft starter	Reference	Weight kg/*lb*
Fan kit + instruction sheet	ATS430C14S6…C17S6	VZ3V4902	0.125/*0.276*
	ATS430C21S6…C59S6	VZ3V4903	0.275/*0.606*
Control block + instruction sheet	ATS430D17S6….ATS430D47S6	VX4G4301	0.350/*0.772*
	ATS430D62S6….ATS430C59S6	VX4G4302	0.400/*0.882*

Altivar Soft Starter ATS430

Soft starters for asynchronous motors

Configuration and runtime tools
Integrated display terminal

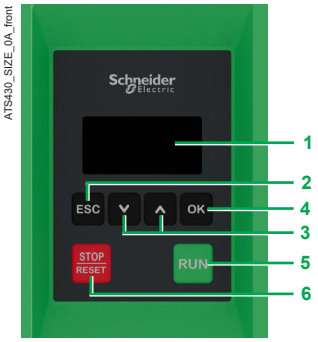

Integrated plain text display terminal

Integrated plain text display and input keys

The integrated plain text display and input keys are used to:
- Control, adjust, and configure the ATS430
- Display current values (motor, I/O, and machine data)

Other features:
- Two-line display
- Languages (Chinese, English, French, German, Italian, Korean, Russian, Spanish, Traditional Chinese, Turkish)
- White backlit LCD screen
- Sensitive-effect buttons

Description

The integrated display and input keys comprise:
1 LCD backlit screen
2 ESC button: aborts a value, parameter, or menu to return to the previous selection
3 Up/Down buttons: increases/decreases a value, scrolls through lines
4 OK button: saves the current value (ENT), selects the menu
5 RUN button: local control of motor run command
6 STOP/RESET button: local control of motor stop command/clearing detected errors

An additional removable remote terminal can be connected to the device's Modbus RJ45 serial port. This can be:
- a plain text display terminal with an IP43 door-mounting solution (see page 25)
- a graphic display terminal with an IP65 door-mounting solution (see page 27)

These options provide an operator interface outside the cabinet and raise the level of usable services.

Variable speed drives

Altivar Machine ATS430

Configuration and runtime tools

Plain text dispay terminal

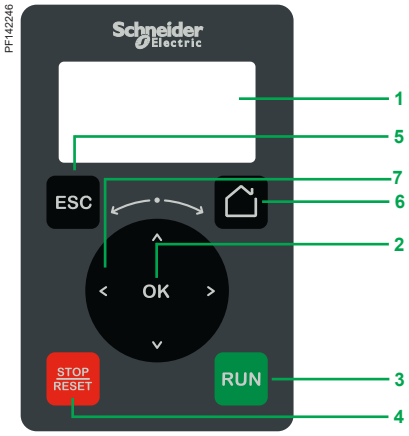

Plain text display terminal VW3A1113

Plain text display terminal

The plain text display terminal can be ordered separately for mounting on a cabinet door with an IP43 solution, using a mounting accessory and a remote connection to the ATS430.

This terminal is used to:
- Control, adjust, and configure the ATS430
- Display current values (motor, I/O, and machine data)
- Store and download configuration (one configuration file can be stored)
- Duplicate the configuration of an ATS430 on another ATS430

Other features:
- Two-line display
- Languages (Chinese, English, French, German, Italian, Korean, Russian, Spanish, Traditional Chinese, Turkish)
- White backlit LCD screen
- Operating range: -15...60 °C/*+5...140 °F*
- Removable, easy plug-in with RJ45 port

Description

The front of the display terminal comprises:
1 LCD backlit screen
2 OK button: saves the current value (ENT), selects the menu
3 RUN button: local control of motor run command
4 STOP/RESET button: local control of motor stop command/clearing detected errors
5 ESC button: aborts a value, parameter, or menu to return to the previous selection
6 Home: root menu
7 Turn ±: navigation dial, increases or decreases a value, scrolls through lines

References

Description	Reference	Weight kg/*lb*
Plain text display terminal	VW3A1113	0.200/*0.441*

PF142222

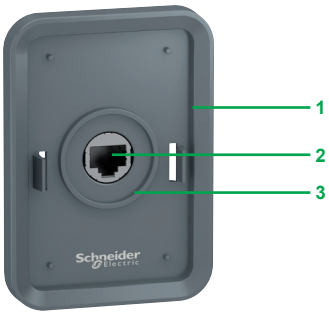

Remote-mounting kit VW3A1114 (front view)

PF142251

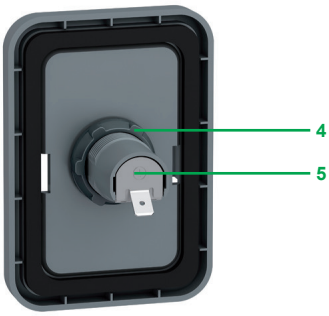

Remote-mounting kit VW3A1114 (rear view)

Mounting kit for plain text display terminal

Remote-mounting kit for mounting on an enclosure door with IP43 degree of protection as standard.

Description

The kit comprises:
- Tightening tool (also sold separately under the reference ZB5AZ905)

1 Mounting plate
2 RJ45 port for the plain text display terminal
3 Seal
4 Fixing nut
5 RJ45 port for connecting the remote-mounting cordset

Cordsets should be ordered separately depending on the length required.

Drilling a hole with a standard Ø 22 tool, as used for a pushbutton, allows the terminal to be mounted without the need for a cut-out in the enclosure.
When the kit is locked tightly onto the panel by the nut, the gasket on the back cannot rotate.

References

Description	Length m/*ft*	IP degree of protection	Reference
Remote-mounting kit Order with remote-mounting cordset W3A1104R●●●	–	43	VW3A1114
Tightening tool for remote-mounting kit	–	–	ZB5AZ905
Remote-mounting cordset equipped with 2 RJ45 connectors	1/*3.28*	–	VW3A1104R10
	3/*9.84*	–	VW3A1104R30

Altivar Soft Starter ATS430

Soft starters for asynchronous motors

Configuration and runtime tools
Graphic display terminal

PF140357

Embedded dynamic QR codes generated on error detection

PF140358

Scanning QR code from a smartphone or tablet

PF140359

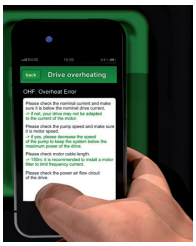

Contextual instantaneous access to online help

ATS430_63441_CPSCT16025

Red backlight automatically activated on detection of an error

PF130899

Graphic display terminal VW3A1111

Graphic display terminal

The graphic display terminal can be ordered separately for mounting on a cabinet door with an IP65 solution, using a mounting accessory and a remote connection to the ATS430.
This terminal can also be connected to:

- A PC to exchange files via a Mini USB/USB connection *(1)*
- Several Altivar devices in multipoint mode

This terminal is used to:

- Control, adjust, and configure the ATS430
- Display current values (motor, I/O, and machine data)
- Display graphic dashboards such as the energy consumption monitoring dashboard
- Store and download configurations (several configuration files can be stored)
- Copy the configuration from one ATS430 and duplicate it to other ATS430 devices
- Load configurations from a PC and duplicate them on Altivar devices

Other characteristics:

- Up to 24 languages (complete alphabets) covering most countries around the world (languages can be removed, added, and updated according to user needs; please consult our website)
- Two-color backlit display (white and red). If an error is detected, the red backlight is automatically activated (function can be disabled)
- Operating range: -15…60 °C/*5…140 °F*
- Trend curves: graphic display of changes in monitoring variables over time

Multipoint screen

In most cases, the graphic terminal is connected point-to-point with an ATS430. However, communication is possible between a graphic display terminal and several Altivar soft starters and Altivar drives (ATV340, ATV600, and ATV900) connected on the same Modbus serial fieldbus via the RJ45 port (HMI or Modbus serial). In this case, multipoint mode is automatically applied to the graphic display terminal.

A maximum of 32 Altivar devices can be connected on the same Modbus serial fieldbus.

Apart from the Stop function linked to the STOP/RESET key, multipoint mode cannot be used to apply a reset after an error has been detected or control the drive via the graphic display terminal: in multipoint mode, the Run key and the Local/Remote key are disabled.

Description

The front of the graphic display terminal comprises:

1. 8-line, 240 x 160-pixel screen, to display bar charts, gages, and trend charts
2. 4 function keys to facilitate navigation and provide contextual links for enabling functions
3. STOP/RESET button: Local control of motor stop command/clearing detected errors
4. RUN button: Local control of motor run command
5. Navigation buttons:
   - OK button: saves the current value (ENT), selects the menu
   - Turn ±: navigation dial, increases or decreases a value, scrolls through lines
   - ESC button: aborts a value, parameter, or menu to return to the previous selection
   - Home: root menu
   - Information (i): contextual help

References

Description	Reference	Weight kg/*lb*
Graphic display terminal *(2)*	VW3A1111	0.200/*0.441*

(1) Graphic display terminal used as a handheld terminal only
(2) Minimum version compatible with Altivar Soft Starters ATS430: V2.3

Altivar Soft Starter ATS430

Soft starters for asynchronous motors

Configuration and runtime tools

Accessories for graphic display terminal

Remote-mounting kit for mounting graphic display terminal on enclosure door (front panel)

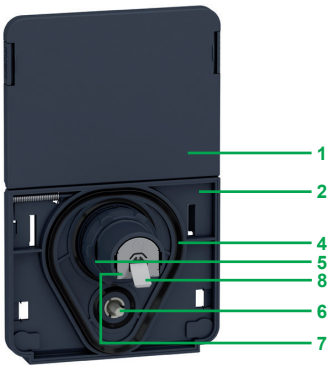

Remote-mounting kit for graphic display terminal (rear panel)

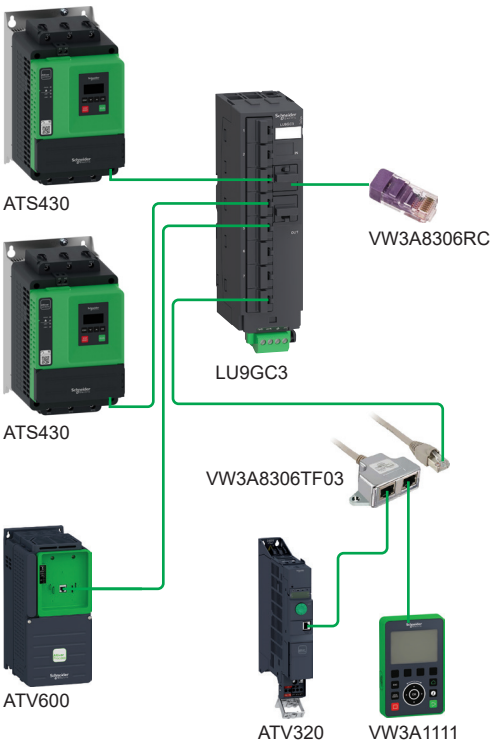

Example of multipoint architecture with a graphic display terminal, Altivar Soft Starter ATS430, and other Altivar devices

Accessories for graphic display terminal

Remote-mounting kit for mounting on enclosure door with IP65/UL Type 12 degree of protection as standard.

Description

The kit includes:

– Tightening tool (also sold separately under the reference ZB5AZ905)
1 Cover plate to maintain IP65 protection when there is no terminal connected
2 Mounting plate
3 RJ45 port for the graphic display terminal
4 Seal
5 Fixing nut
6 Anti-rotation pin
7 RJ45 port for connecting the remote-mounting cordset (10 m/*32.8 ft* maximum) Cordsets should be ordered separately depending on the length required.
8 Grounding connector

Drilling a hole with a standard Ø 22 tool, as used for a pushbutton, allows the unit to be mounted without the need for a cut-out in the enclosure (Ø 22.5 mm/*Ø 0.89 in.* drill hole).

References

Description	Length m/*ft*	IP rating	Reference
Remote mounting kit Order with remote-mounting cordset VW3A1104R●●●	–	65/UL Type 12	VW3A1112
Tightening tool for remote-mounting kit	–	–	ZB5AZ905
Remote-mounting cordset equipped with two RJ45 connectors	1/*3.28*	–	VW3A1104R10
	3/*9.84*	–	VW3A1104R30
USB/Mini B USB cable for connecting the graphic display terminal to a PC	–	–	TCSXCNAMUM3P

Multidrop connection accessories

These accessories are used to connect a graphic display terminal to several Altivar devices via a multidrop link. This multidrop connection uses the Modbus serial RJ45 port of the ATS430, and the RJ45 terminal port on the front face of an Altivar device equipped with a removable terminal communication port.

.

Connection accessories

Description			Sold in sets of	Unit reference
Modbus splitter box, 10 RJ45 connectors, and one screw terminal block			–	LU9GC3
Modbus T-junction boxes	With 0.3 m/*0.98 ft* integrated cable		–	VW3A8306TF03
	With 1 m/*3.28 ft* integrated cable		–	VW3A8306TF10
Modbus line terminator	For RJ45 connector	R = 120 Ω C = 1 nf	2	VW3A8306RC

Cordsets (equipped with two RJ45 connectors)

Used for	Length m/*ft*	Reference
Serial link	0.3/*0.98*	VW3A8306R03
	1/*3.28*	VW3A8306R10
	3/*9.84*	VW3A8306R30

Altivar Soft Starter ATS430

Soft starters for asynchronous motors

Configuration and runtime tools

DTM

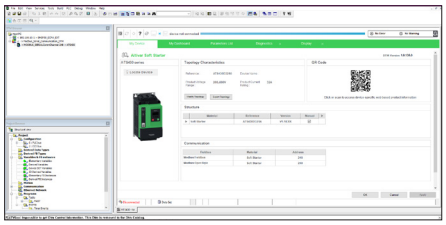

Altivar Soft Starter ATS430 DTM in EcoStruxure Control Expert

DTM

Presentation

Using FDT/DTM technology, it is possible to configure, control, and diagnose the Altivar Soft Starter ATS430 directly in third party and SoMove software by means of the same software brick (DTM).
FDT/DTM technology standardizes the communication interface between field devices and host systems. The DTM contains a uniform structure for managing soft starter access parameters.

Specific functions of Altivar Soft Starter ATS430

- Offline or online access to soft starter data
- Configuration and management of cybersecurity features
- Access to threat intelligence file
- Transfer of configuration files from and to the soft starter
- Customization (My Menu, etc.)
- Access to drive parameters
- Graphic interface to assist with configuration of the ATS430 functions
- Detected error and warning logs (with timestamping)

Advantages of the DTM library in SoMove:

- Altivar-oriented software environment
- Wired connection to the Modbus serial communication port
- Standard cable (file transfer performance)
- Third-party software and download
- The Altivar Soft Starter DTM library is a flexible, open, and interactive tool that can be used in a third-party FDT.
- DTMs can be downloaded from our website.

SoMove software

SoMove software

SoMove software for PC is used to configure, set up, maintain, and upgrade the firmware (see page 33) of the Altivar Soft Starter ATS430.

The software can be connected to the Altivar Soft Starter ATS430 via Modbus serial connection.

For more information on SoMove setup software, please consult the SoMove Setup Software catalog.

Table showing possible combinations of accessories for ATS430

ATS430 reference	Protective covers for power terminals	Line chokes
ATS430D17S6	–	VZ1L015UM17T
ATS430D32S6	–	VZ1L040U600T
ATS430D47S6	–	VZ1L070U350T
ATS430D62S6	–	VZ1L070U350T
ATS430D75S6	–	VZ1L150U170T
ATS430D88S6	–	VZ1L150U170T
ATS430C11S6	–	VZ1L150U170T
ATS430C14S6	VW3G4701	VZ1L150U170T
ATS430C17S6	VW3G4701	VZ1L250U100T
ATS430C21S6	VW3G4702	VZ1L250U100T
ATS430C25S6	VW3G4702	VZ1L250U100T
ATS430C32S6	VW3G4702	VZ1L325U075T
ATS430C41S6	VW3G4702	VZ1L530U045T
ATS430C48S6	VW3G4703	VZ1L530U045T
ATS430C59S6	VW3G4703	VZ1LM10U024T

Altivar Soft Starter ATS430

Soft starters for asynchronous motors
Communication buses
Description and functions

Altivar Soft Starter ATS430 ports and slots

Description

The Altivar Soft Starter ATS430 range has been designed to simplify connections to communication buses by means of the following:

1 Integrated RJ45 communication port for display terminal (HMI) or Modbus fieldbus

2 Integrated 4-way screw terminal block communication port for Modbus fieldbus

Functions

Altivar Soft Starter ATS430 functions can be accessed via the Modbus fieldbus:

- Control
- Monitoring
- Condition monitoring
- Adjustment
- Configuration

The command may come from different sources:

- Digital input or analog I/O terminals
- Modbus fieldbus
- Remote/local display terminals

As one of the advanced functions, ATS430 control sources can be managed and switched according to the application requirements.
The communication periodic I/O data assignment can be selected using the communication bus configuration software.

Communication is monitored according to criteria specific to the Modbus protocol. The response of the soft starter to a detected communication interruption can be configured as follows:

- Freewheel stop
- Stop on ramp
- Ignore the detected error

Altivar Soft Starter ATS430

Soft starters for asynchronous motors
Communication buses
Accessories for integrated communication protocol

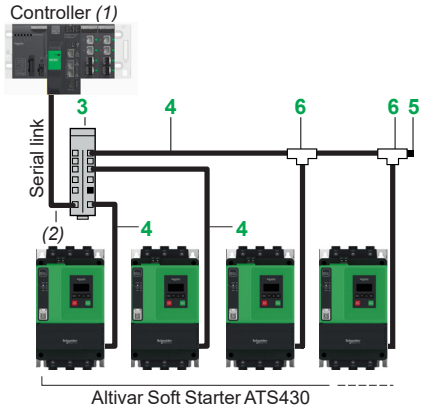

Example of connection to the Modbus RTU with an RJ45 connexion

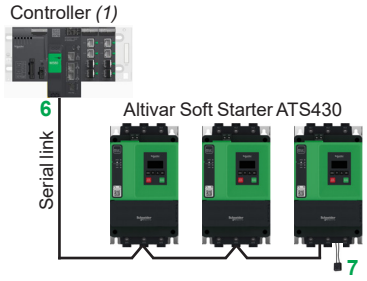

Example of connection to the Modbus RTU with open-style connection

Accessories for integrated communication protocol

Description		Item	Length m/*ft*	Reference
RJ45 Modbus serial link connection accessories				
Modbus splitter box 10 RJ45 connectors and one screw terminal block		3	–	LU9GC3
Cordsets for modbus serial link equipped with two RJ45 connectors		4	0.3/*0.98*	VW3A8306R03
			1/*3.28*	VW3A8306R10
			3/*9.84*	VW3A8306R30
Modbus T-junction boxes (with integrated cable)		6	0.3/*0.98*	VW3A8306TF03
			1/*3.28*	VW3A8306TF10
Modbus line terminator for RJ45 connector *(3)*	R = 120 Ω	5	–	VW3A8306RC
	R = 150 Ω		–	VW3A8306R
Open-style Modbus serial link connection accessories				
Cable for Modbus serial link 1x RJ45 and free wires at other end		6	3/*9.84*	VW3A8306D30
Modbus line terminator for screw terminal C = 1 nf	R = 120 Ω	7	–	VW3A8306DRC
	R = 150 Ω		–	VW3A8306DR

(1) Please refer to the Modicon catalogs.
(2) Cable depends on the controller.
(3) Sold in sets of two.

Altivar Soft Starter ATS430

Soft starters for asynchronous motors
Firmware update
Presentation and process

Firmware update through Modbus serial using SoMove

Firmware upload of several ATS430 soft starters at the same time through Modbus serial using Ecostruxure Automation Device Maintenance

Firmware update using SoMove or EcoStruxure Automation Device Maintenance

Presentation

The firmware of the Altivar Soft Starter ATS430 offer can be updated.
This includes:
- The firmware of the ATS430 product
- The texts and languages of the display terminals
- The firmware of the display terminals *(1)*

The firmware and languages are available from the Altivar Soft Starter ATS430 page on our website. Using the Schneider Electric Software Update tool, notifications are automatically sent when new updates are available.

Firmware update process

There are different ways to update the firmware:
- Single product firmware update using SoMove software *(2)*
- Multiple product firmware update using EcoStruxure Automation Device Maintenance *(3)*

The update process comprises two steps:
- The first step is to transfer the firmware to the product, which can be performed when the motor is either running or stopped. The control section of the ATS430 must be powered on. The product firmware package and keypad languages can be uploaded in one operation via the Modbus serial port.
- The second step is to apply the uploaded firmware in the products: the control section must be powered on and this operation can only be performed with the motor stopped. The firmware can be applied from EcoStruxure Automation Device Maintenance, SoMove, or the display terminal.

This two-step process avoids the risk of a potential loss of usability of the product in case of incorrect operations during the firmware update process, while also reducing the amount of time the motor is stopped.

Cybersecurity-related features in the firmware update:
- The firmware is delivered with a digital certificate that is generated by a cryptographic key.
- The ATS430 checks the authenticity of the firmware before applying it. The authenticity of the firmware is also checked on each power-up.
- The firmware can only be updated and applied by a registered user with a valid user account and associated rights.
- Firmware update operations are recorded as events in the security-related reports.

Connection accessories

Description	Length m/*ft*	Reference
High-speed USB-A/RJ45 flashing cordset	2.5/*8.2*	**VW3A8127**
USB/RJ45 connection cable For connection between PC and soft starter Modbus serial port	2.5/*8.2*	**TCSMCNAM3M002P**
RJ45 female/female adapter For connection to plain text display terminal	–	**VW3A1105**

(1) Contact Schneider Electric Services to update the firmware of the graphic display terminal.
(2) Refer to page 29.
(3) Download EcoStruxure Automation Device Maintenance from its dedicated page on our website.

Altivar Soft Starter ATS430

Soft starters for asynchronous motors

Options: Line chokes and protective covers for power terminals

F19_ACCESSORIES_CPODA2016006

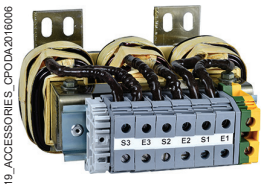

VZ1L150U170T

Line chokes

The use of line chokes is recommended in particular when installing several soft starters on the same line supply to limit low frequency interference that may affect low level loads.
The inductance values are defined for a voltage drop between 3% and 5% of the nominal line voltage.
Install the line choke between the line contactor and the soft starter.

References

Corresponding soft starter	Line choke			Reference	Weight
	Inductance value	Nominal current	Degree of protection		
	mH	A			kg/*lb*
ATS430D17S6	1.7	15	IP20	VZ1L015UM17T	3/*6.6*
ATS430D32S6	0.6	40	IP20	VZ1L040U600T	4.5/*9.9*
ATS430D47S6 ...D62S6	0.35	70	IP20	VZ1L070U350T	5.5/*12.1*
ATS430D75S6 ...C14S6	0.17	150	IP00	VZ1L150U170T	9/*19.8*
ATS430C17S6 ...C25S6	0.1	250	IP00	VZ1L250U100T	16/*35.3*
ATS430C32S6	0.075	325	IP00	VZ1L325U075T	23.3/*51.4*
ATS430C41S6 ... C48S6	0.045	530	IP00	VZ1L530U045T	28.2/*62.2*
ATS430C59S6	0.024	1025	IP00	VZ1LM10U024T	66/*145*

ATS430_S2_COVER_Default

VW3G4701

Protective covers for power terminals

The protective covers are intended to be mounted on 140 to 590 A soft starters that have unprotected power terminals. The protective covers provide an IP20 protection rating.

References

Corresponding soft starter	Number of covers per set	Reference	Weight
			kg/*lb*
ATS430C14S6 ... C17S6	6	VW3G4701	0.2/*0.44*
ATS430C21S6 ... C41S6	6	VW3G4702	0.6/*1.32*
ATS430C48S6 ... C59S6	6	VW3G4703	0.7/*1.54*

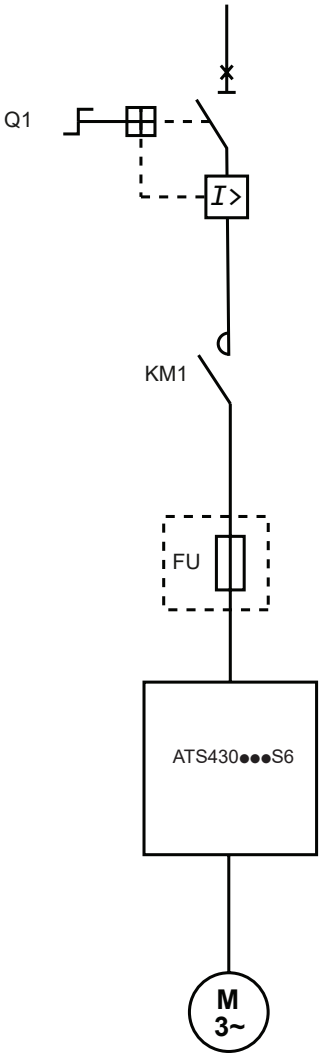

Presentation

Type of coordination

The EN/IEC 60947-4-2 standard makes a distinction between two different types of coordination: type 1 coordination and type 2 coordination:

- Type 1 coordination requires that, under short-circuit conditions, the contactor or soft starter shall cause no danger to persons or the installation and may not be suitable for further service without repair and replacement of parts.

- Type 2 coordination requires that, under short-circuit conditions, the contactor or soft starter shall cause no danger to persons or the installation and shall be suitable for further use. The risk of contact welding is recognized, in which case the manufacturer shall indicate the measures to be taken as regards the maintenance of the equipment.
  For type 2 coordination (according to IEC 60947-4-2), fast-acting fuses must be installed in series with the soft starter to provide protection for the ATS430 in the event of a short circuit. After a short circuit, the fast-acting fuses must be replaced and the contactor must be checked.

***Note**: Use of a short-circuit protection device (SCPD) that does not comply with the manufacturer's specification can invalidate the coordination.*

Line contactor

The line contactor on the ATS430 is optional.
When used, the line contactor is controlled by relay R1. There are two possibilities influencing the wiring diagram:

- R1 assigned to "Operating State Fault":
  - The line contactor is controlled by the Power ON and Power OFF pushbuttons and relay R1. Relay R1 is activated when the soft starter is powered up (minimum A1/A2 control) and is deactivated when an error is detected and the motor switches to freewheel mode.
- R1 assigned to "Line Contactor":
  - The line contactor is controlled by relay R1 on the basis of the ATS430 RUN and STOP commands. Relay R1 is activated by a RUN command (or a preheating command). It is deactivated at the end of deceleration, or when the motor switches to freewheel mode after a STOP command. It is also deactivated when an error is detected: the motor switches to freewheel mode at this point.

Thermal monitoring

The Altivar Soft Starter ATS430 will help to protect the motor and the cables against overloads. If this monitoring function is disabled, external thermal monitoring must be provided.

Altivar Soft Starter ATS430

Soft starters for asynchronous motors
Type 1 coordination according to IEC 60947-4-2
230 V and 380/400/415 V power supply

230 V power supply, ATS430 connected in-line

Motor power	Combination	ATS430 reference	Circuit breaker *(1)*	Optional line contactor *(2)*
kW	Iq (kA)	Class 10 Normal duty	Q1 reference	KM1 reference
4	50	ATS430D17S6	GV2L20	LC1D18●●
7.5	50	ATS430D32S6	GV2L32	LC1D32●●
11	50	ATS430D47S6	GV3L65	LC1D50A●●
15	50	ATS430D62S6	GV3L65	LC1D65A●●
18.5	50	ATS430D75S6	GV4L80B	LC1D80●●
22	50	ATS430D88S6	GV4L115B	LC1D115●●
30	50	ATS430C11S6	GV4L115B	LC1D115●●
37	50	ATS430C14S6	NSX160F MA	LC1D150●●
45	50	ATS430C17S6	NSX250F MA	LC1G185●●●●
55	50	ATS430C21S6	NSX250F MA	LC1G225●●●●
75	50	ATS430C25S6	NSX400N MicroLogic 1.3 M	LC1G265●●●●
90	50	ATS430C32S6	NSX400N MicroLogic 1.3 M	LC1G330●●●●
110	70	ATS430C41S6	NSX630N MicroLogic 1.3 M	LC1G400●●●●
132	70	ATS430C48S6	NSX630N MicroLogic 1.3 M	LC1G500●●●●
160	70	ATS430C59S6	NS630bN MicroLogic 5.0 LR Off	LC1G630●●●●

380/400/415 V power supply, ATS430 connected in-line

Motor power	Combination	ATS430 reference	Circuit breaker *(1)*	Optional line contactor *(2)*
kW	Iq (kA)	Class 10 Normal duty	Q1 reference	KM1 reference
7.5	50	ATS430D17S6	GV2L20	LC1D18●●
15	50	ATS430D32S6	GV2L32	LC1D32●●
22	50	ATS430D47S6	GV3L65	LC1D50A●●
30	50	ATS430D62S6	GV3L65	LC1D65A●●
37	50	ATS430D75S6	GV4L80N	LC1D80●●
45	50	ATS430D88S6	GV4L115N	LC1D115●●
55	50	ATS430C11S6	GV4L115N	LC1D115●●
75	50	ATS430C14S6	NSX160N MA	LC1D150●●
90	50	ATS430C17S6	NSX250N MA	LC1G185●●●●
110	50	ATS430C21S6	NSX250N MA	LC1G225●●●●
132	50	ATS430C25S6	NSX400N MicroLogic 1.3 M	LC1G265●●●●
160	50	ATS430C32S6	NSX400N MicroLogic 1.3 M	LC1G330●●●●
220	70	ATS430C41S6	NSX630H MicroLogic 1.3 M	LC1G400●●●●
250	70	ATS430C48S6	NSX630H MicroLogic 1.3 M	LC1G500●●●●
315	70	ATS430C59S6	NS630bH MicroLogic 5.0 LR Off	LC1G630●●●●

(1) Set Irm current of the circuit breaker (when available) to a minimum of six times the current rating of the soft starter.
(2) Replace with the appropriate control circuit voltage code (refer to page 40).

Altivar Soft Starter ATS430

Soft starters for asynchronous motors

Type 1 coordination according to IEC 60947-4-2
440 and 500 V power supply

440 V power supply, ATS430 connected in-line

Motor power	Combination	ATS430 reference	Circuit breaker *(1)*	Optional line contactor *(2)*
kW	Iq (kA)	Class 10 Normal duty	Q1 reference	KM1 reference
7.5	50	ATS430D17S6	GV4L25N	LC1D18●●
15	50	ATS430D32S6	GV4L50N	LC1D40A●●
22	50	ATS430D47S6	GV4L50N	LC1D40A●●
30	50	ATS430D62S6	GV4L80N	LC1D65A●●
37	50	ATS430D75S6	GV4L80N	LC1D65A●●
45	50	ATS430D88S6	GV4L80N	LC1D80●●
55	50	ATS430C11S6	GV4L115N	LC1D115●●
75	50	ATS430C14S6	NSX160N MA	LC1D150●●
90	50	ATS430C17S6	NSX250N MA	LC1G150●●●●
110	50	ATS430C21S6	NSX250N MA	LC1G185●●●●
132	50	ATS430C25S6	NSX250N MA	LC1G225●●●●
160	50	ATS430C32S6	NSX400H MicroLogic 1.3 M	LC1G265●●●●
220	70	ATS430C41S6	NSX630S MicroLogic 1.3 M	LC1G400●●●●
250	70	ATS430C48S6	NSX630S MicroLogic 1.3 M	LC1G400●●●●
355	70	ATS430C59S6	NS630bL MicroLogic 5.0 LR Off	LC1G630●●●●

500 V power supply, ATS430 connected in-line

Motor power	Combination	ATS430 reference	Circuit breaker *(1)*	Optional line contactor *(2)*
kW	Iq (kA)	Class 10 Normal duty	Q1 reference	KM1 reference
9	50	ATS430D17S6	NSX100H MA	LC1D40A●●
18.5	50	ATS430D32S6	NSX100H MA	LC1D40A●●
30	50	ATS430D47S6	NSX100H MA	LC1D50A●●
37	50	ATS430D62S6	NSX100H MA	LC1D65A●●
45	50	ATS430D75S6	NSX100H MA	LC1D80●●
55	50	ATS430D88S6	NSX100H MA	LC1D80●●
75	50	ATS430C11S6	NSX160H MA	LC1D150●●
90	50	ATS430C14S6	NSX160H MA	LC1D150●●
110	50	ATS430C17S6	NSX250H MA	LC1G185●●●●
132	50	ATS430C21S6	NSX250H MA	LC1G225●●●●
160	50	ATS430C25S6	NSX400H MicroLogic 1.3 M	LC1G265●●●●
220	50	ATS430C32S6	NSX630H MicroLogic 1.3 M	LC1G400●●●●
250	70	ATS430C41S6	NSX630L MicroLogic 1.3 M	LC1G400●●●●
315	70	ATS430C48S6	NSX630L MicroLogic 1.3 M	LC1G500●●●●
400	70	ATS430C59S6	NS630bL MicroLogic 5.0 LR Off	LC1G800●●●●

(1) Set Irm current of the circuit breaker (when available) to a minimum of six times the current rating of the soft starter.
(2) Replace with the appropriate control circuit voltage code (refer to page 40)

Altivar Soft Starter ATS430

Soft starters for asynchronous motors

Type 2 coordination according to IEC 60947-4-2
230 V and 380/400/415 V power supply

230 V power supply, ATS430 connected in-line

Motor power	Iq	ATS430	Circuit breaker *(1)*	Optional line contactor	Fast-acting fuses with microswitch		Fuse disconnector
kW	(kA)	Class 10 Normal duty	Q1 reference	KM1 reference	FU reference	Size	Reference
4	50	ATS430D17S6	GV2L20	LC1D25●●	DF3ER50	14 x 51	GK1EK
7.5	50	ATS430D32S6	GV2L32 + GV1L3	LC1D32●●	DF3FR80	22 x 58	GS1JD3
11	35	ATS430D47S6	GV3L65	LC1D80●●	DF3FR100	22 x 58	GS1JD3
15	50	ATS430D62S6	GV4L80B	LC1D65A●●	DF400125	00	GS1KKD3
18.5	50	ATS430D75S6	GV4L80B	LC1D80●●	DF400125	00	GS1KKD3
22	50	ATS430D88S6	GV4L115B	LC1D115●●	DF400160	00	GS1LLD3
30	50	ATS430C11S6	GV4L115B	LC1D115●●	DF400160	00	–
37	50	ATS430C14S6	NSX160F MA	LC1D150●●	DF430400	30	–
45	50	ATS430C17S6	NSX250F MA	LC1G185●●●●	DF430400	30	–
55	50	ATS430C21S6	NSX250F MA	LC1G225●●●●	–	31	–
75	50	ATS430C25S6	NSX400F MicroLogic 1.3 M	LC1G265●●●●	DF431700	31	–
90	50	ATS430C32S6	NSX400F MicroLogic 1.3 M	LC1G330●●●●	DF431700	31	–
110	50	ATS430C41S6	NSX630F MicroLogic 1.3 M	LC1G400●●●●	DF433800	33	–
132	50	ATS430C48S6	NSX630F MicroLogic 1.3 M	LC1G500●●●●	–	33	–
160	50	ATS430C59S6	NSX630bN MicroLogic 5.0 LR Off	LC1G630●●●●	–	33	–

380/400/415 V power supply, ATS430 connected in-line

Motor power	Iq	ATS430	Circuit breaker *(1)*	Optional line contactor	Fast-acting fuses with microswitch		Fuse disconnector
kW	(kA)	Class 10 Normal duty	Q1 reference	KM1 reference	FU reference	Size	Reference
7.5	50	ATS430D17S6	GV2L20	LC1D25●●	DF3ER50	14 x 51	GK1EK
15	40	ATS430D32S6	GV2L32 + G1VL3	LC1D32●●	DF3FR80	22 x 58	GS1JD3
22	40	ATS430D47S6	GV3L50	LC1D50A●●	DF3FR100	22 x 58	GS1JD3
30	50	ATS430D62S6	GV3L65	LC1D65A●●	DF400125	00	GS1KKD3
37	50	ATS430D75S6	GV4L80N	LC1D80●●	DF400125	00	GS1KKD3
45	50	ATS430D88S6	GV4L115N	LC1D115●●	DF400160	00	GS1LLD3
55	50	ATS430C11S6	GV4L115N	LC1D115●●	DF400160	00	–
75	50	ATS430C14S6	NSX160N MA	LC1D150●●	DF430400	30	–
90	50	ATS430C17S6	NSX250N MA	LC1G185●●	DF430400	30	–
110	50	ATS430C21S6	NSX250N MA	LC1G225●●	–	31	–
132	50	ATS430C25S6	NSX400N MicroLogic 1.3 M	LC1G265●●●●	DF431700	31	–
160	50	ATS430C32S6	NSX400N MicroLogic 1.3 M	LC1G330●●●●	DF431700	31	–
220	50	ATS430C41S6	NSX630N MicroLogic 1.3 M	LC1G500●●●●	DF433800	33	–
250	50	ATS430C48S6	NSX630N MicroLogic 1.3 M	LC1G500●●●●	–	33	–
315	50	ATS430C59S6	NS630bN MicroLogic 5.0 LR Off	LC1G630●●●●	–	33	–

(1) Set Irm current of the circuit breaker (when available) to a minimum of six times the current rating of the soft starter.
(2) Replace with the appropriate control circuit voltage code (refer to page 40)
(3) Type 2 coordination is only possible if the fast-acting fuses remain in the motor supply circuit and are not bypassed at the end of starting.

Altivar Soft Starter ATS430

Soft starters for asynchronous motors

Type 2 coordination according to IEC 60947-4-2
440 V and 500 Vpower supply

440 V power supply, ATS430 connected in-line

Motor power	Iq	ATS430	Circuit breaker *(1)*	Optional line contactor	Fast-acting fuses with microswitch		Fuse disconnector
kW	(kA)	Class 10 Normal duty	Q1 reference	KM1 reference	FU reference	Size	Reference
7.5	50	ATS430D17S6	GV4L25N	LC1D65A●●	DF3ER50	14 x 51	GK1EK
15	20	ATS430D32S6	GV4L50N	LC1D65A●●	DF3FR80	22 x 58	GS1JD3
22	20	ATS430D47S6	GV4L50N	LC1D65A●●	DF3FR100	22 x 58	GS1JD3
30	50	ATS430D62S6	GV4L80N	LC1D65A●●	DF400125	00	GS1KKD3
37	50	ATS430D75S6	GV4L80N	LC1D65A●●	DF400125	00	GS1KKD3
45	40	ATS430D88S6	GV4L80N	LC1D80●●	DF400160	00	GS1LLD3
55	40	ATS430C11S6	GV4L115N	LC1D115●●	DF400160	00	–
75	50	ATS430C14S6	NSX160N MA	LC1D150●●	DF430400	30	–
90	50	ATS430C17S6	NSX250N MA	LC1G150●●●●	DF430400	30	–
110	50	ATS430C21S6	NSX250N MA	LC1G185●●●●	DF431700	31	–
132	50	ATS430C25S6	NSX400 MA	LC1G225●●●●	–	31	–
160	50	ATS430C32S6	NSX400N MicroLogic 1.3 M	LC1G265●●●●	DF431700	31	–
220	50	ATS430C41S6	NSX630H MicroLogic 1.3 M	LC1G400●●●●	DF433800	33	–
250	50	ATS430C48S6	NSX630H MicroLogic 1.3 M	LC1G400●●●●	–	33	–
355	50	ATS430C59S6	NS630bN MicroLogic 5.0 LR Off	LC1G630●●●●	–	33	–

500 V power supply, ATS430 connected in-line

Motor power	Iq	ATS430	Circuit breaker *(1)*	Optional line contactor	Fast-acting fuses with microswitch		Fuse disconnector
kW	(kA)	Class 10 Normal duty	Q1 reference	KM1 reference	FU reference	Size	Reference
9	50	ATS430D17Y	GV2L20 + LA9LB920	LC1D25●●	DF3ER50	14 x 51	GK1EK
18.5	20	ATS430D32Y	GV2L32 + LA9LB920	LC1D32●●	DF3FR80	22 x 58	GS1JD3
30	20	ATS430D47Y	NSX100H MA	LC1D80●●	DF3FR100	22 x 58	GS1JD3
37	50	ATS430D62Y	NSX100H MA	LC1D150●●	DF400125	00	GS1KKD3
45	50	ATS430D75Y	NSX100H MA	LC1D150●●	DF400125	00	GS1KKD3
55	40	ATS430D88Y	NSX100H MA	LC1D150●●	DF400160	00	GS1LLD3
75	50	ATS430C11Y	NSX160H MA	LC1D150●●	DF400160	00	–
90	50	ATS430C14Y	NSX160H MA	LC1G185●●●●	DF430400	30	–
110	50	ATS430C17Y	NSX160H MA	LC1G185●●●●	DF430400	30	–
132	50	ATS430C21Y	NSX250H MA	LC1G225●●●●	–	31	–
160	50	ATS430C25Y	NSX400H MicroLogic 1.3 M	LC1G265●●●●	DF431700	31	–
220	50	ATS430C32Y	NSX400H MicroLogic 1.3 M	LC1G400●●●●	DF431700	31	–
250	40	ATS430C41Y	NSX630H MicroLogic 1.3 M	LC1G400●●●●	DF433800	33	–
315	50	ATS430C48Y	NSX630H MicroLogic 1.3 M	LC1G500●●●●	–	33	–
400	50	ATS430C59Y	NS630bH MicroLogic 5.0 LR Off	LC1G800●●●●	–	33	–

(1) Set Irm current of the circuit breaker (when available) to a minimum of six times the current rating of the soft starter.
(2) Replace with the appropriate control circuit voltage code (refer to page 40)
(3) Type 2 coordination is only possible if the fast-acting fuses remain in the motor supply circuit and are not bypassed at the end of starting.

Altivar Soft Starter ATS430

Soft starters for asynchronous motors

Line contactor references

Line contactor reference table

Basic reference	Power supply	Control voltage code												
	AC	24	42	48	110	115	220	230	240	380	400	415	440	500
LC1D18…D150 *(1)*	50/60 Hz	B7	D7	E7	F7	FE7	M7	P7	U7	Q7	V7	N7	R7	S7
LC1D18…D65 *(2)*	50 Hz	B5	D5	E5	–	–	–	P5	–	–	–	–	–	–
LC1D80…D115	50 Hz	B5	D5	E5	F5	FE5	M5	P5	U5	Q5	V5	N5	R5	S5
LC1D80…D115	60 Hz	B6	–	E6	F6	–	M6	–	U6	Q6	–	–	R6	–
	DC	12	24	36	48	60	72	110	125	220	250	440		
LC1D18…D38 *(3)*	U 0.7…1.25 Uc	JD	BD	CD	ED	ND	SD	FD	GD	MD	UD	RD		
LC1D40A…D65A *(3)*	U 0.75…1.25 Uc	JD	*(5)*	*(5)*	*(5)*	*(5)*	*(5)*	*(5)*	*(5)*	*(5)*	*(5)*	RD		
LC1D80…D95	U 0.85…1.1 Uc	JD	BD	CD	ED	ND	SD	FD	GD	MD	UD	RD		
	U 0.75…1.2 Uc	JW	BW	CW	EW	–	SW	FW	–	MW	–	–		
LC1D115…150 *(4)*	U 0.75…1.2 Uc	–	BD	–	ED	ND	SD	FD	GD	MD	UD	RD		
	DC (low consumption)	5	12	20	24	48	110	220	250					
LC1D18…D38 *(3)*	U 0.8…1.25 Uc	AL	JL	ZL	BL	EL	FL	ML	UL					
	AC/DC (low consumption)													
LC1D18…D150	See TeSys D Green, page B8/4 of the TeSys catalog													
	AC/DC	24…48		48…130		100…250		200…500						
LC1G150…G500		BEEA		EHEN		KUEN		LSEA						
LC1G630…G800		–		EHEN		KUEN		LSEA						

(1) D115 and D150 coils with built-in suppression as standard, by bidirectional peak limiting diode.
(2) Not available with connection for lugs or bars.
(3) Coils with integral suppression device fitted as standard, by bidirectional peak limiting diode.
(4) Coil with built-in suppression device as standard.
(5) For these coil voltages, choose from TeSys D Green contactors. Same product reference radical, just add BBE coil voltage code for 24 V DC, BNE for 24-60 V AC/DC, EHE for 48-130 V AC/DC, or KUE for 100-250 V AC/DC. Example: LC1D40ABBE.

Altivar Soft Starter ATS490

Soft starters for asynchronous motors

Soft starters and line chokes

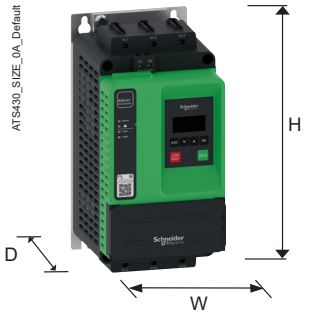

Soft starters		
Overall dimensions		
Reference	**W x H x D**	
	mm	***in.***
ATS430D17S6	130 x 273 x 169	*5,1 x 10,7 x 6,6*
ATS430D32S6	130 x 273 x 169	*5,1 x 10,7 x 6,6*
ATS430D47S6	130 x 273 x 194	*5,1 x 10,7 x 7,6*
ATS430D62S6	160 x 283 x 230	*6,3 x 11,1 x 9*
ATS430D75S6	160 x 283 x 230	*6,3 x 11,1 x 9*
ATS430D88S6	160 x 289 x 230	*6,3 x 11,4 x 9*
ATS430C11S6	160 x 289 x 230	*6,3 x 11,4 x 9*
ATS430C14S6	160 x 356 x 231	*6,3 x 14,01 x 9,09*
ATS430C17S6	160 x 356 x 231	*6,3 x 14,01 x 9,09*
ATS430C21S6	206 x 443 x 261	*8,11 x 17,44 x 10,28*
ATS430C25S6	206 x 443 x 261	*8,11 x 17,44 x 10,28*
ATS430C32S6	206 x 443 x 261	*8,11 x 17,44 x 10,28*
ATS430C41S6	206 x 443 x 261	*8,11 x 17,44 x 10,28*
ATS430C48S6	304 x 455 x 296	*11,97 x 17,91 x 11,65*
ATS430C59S6	304 x 455 x 296	*11,97 x 17,91 x 11,65*

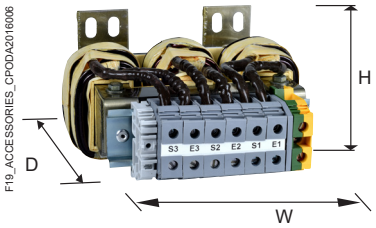

Line chokes		
Overall dimensions		
Reference	**W x H x D**	
	mm	***in.***
VZ1L015UM17T	130 x 155 x 80	*5.12 x 6.10 x 3.15*
VZ1L040U600T	175 x 200 x 130	*6.89 x 7.87 x 5.12*
VZ1L070U350T	180 x 200 x 150	*7.09 x 7.87 x 5.91*
VZ1L150U170T	270 x 234 x 147	*10.63 x 9.21 x 5.79*
VZ1L250U100T	270 x 237 x 190	*10.63 x 9.33 x 7.48*
VZ1L325U075T	300 x 260 x 206	*11.81 x 10.24 x 8.11*
VZ1L530U045T	380 x 415 x 225	*14.96 x 16.34 x 8.86*
VZ1LM10U024T	455 x 420 x 300	*17.91 x 16.54 x 11.81*

Variable speed drives and soft starters

A whole world of Services for your drives and soft starters by Schneider Electric

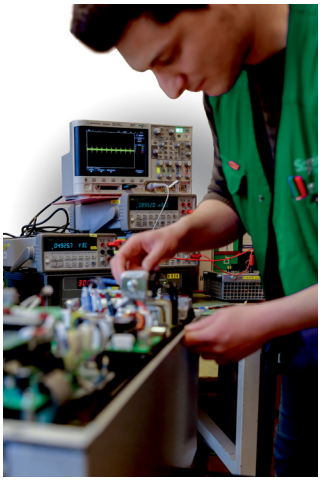

Support and services offer by Schneider Electric

Variable speed drives and soft starters are an important part of your operation, with downtime having a significant impact on your business. Protecting that investment through comprehensive services means that you can continue to deliver optimally throughout the lifecycle of your drive and soft starter. Our range of services is designed to help you get more out of your drives and soft starters, your operation, and to improve your environmental impact.

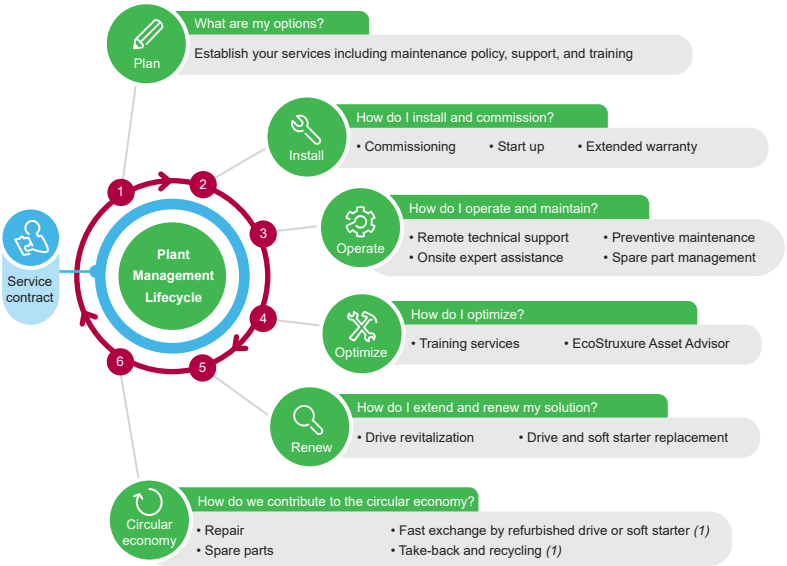

Install

- **Extended Warranty** service helps you control your maintenance costs. Schneider Electric will provide a replacement drive and soft starter or repair the product on site during a period of one or three years more than the standard warranty, in all conditions covered by the extended warranty.
- **Start-up** service is the first essential step in maintenance and optimal operational performance of the drive or soft starter. Our comprehensive review checks up to 100 parameters and is especially designed for drives and soft starters in simple applications.
- **Commissioning** service ensures a reliable start for operations with more complex applications and drive systems. The unique requirements of your process need to be carefully considered to ensure efficient operations.

Operate

- **Preventive Maintenance** service performs predetermined maintenance actions according to a product-specific schedule. The work is carried out by certified technical experts following Schneider Electric instructions. This service minimizes unplanned downtime and extends your equipment lifetime.
- **Remote Technical Support** brings you expert product assistance over the phone, email, chat, or web for any technical questions relating to your drives and soft starters, including configuration, diagnostics, and maintenance. Our global support team is multi-lingual with support available up to R&D level experts if needed.
- **On-Site Expert Assistance** service offers you highly skilled field service experts to troubleshoot and resolve drive or soft starter equipment-related matters at your site, as a back-up source of expertise for your personnel.
- **Spare Part Management** service identifies and manages your critical spare parts either on your site or offsite. This service ensures that you have access to the spares you need without having to invest in capital to maintain the stock.

(1) Services available in countries that have the right structure and capabilities.

Variable speed drives and soft starters

A whole world of Services for your drives and soft starters by Schneider Electric

Support and services offer by Schneider Electric (continued)

Optimize

- **Training** service offers eLearning, classroom, and onsite training provision to enhance the technical installation, commissioning, and maintenance competencies of your personnel. Added competence translates into further process efficiency and reliability, as well as employee satisfaction.

- **EcoStruxure Asset Advisor** service enables you to move from reactive to predictive maintenance and access actionable insight provided by the advisor. The service predicts drive- and motor-related actions through connected devices and advanced algorithms monitored by Schneider Electric's experts.

Renew

- **Drive Revitalization** is an excellent choice if you prefer to use your aging drives longer and want to extend their service life with affordable and comprehensive inspection and replacement of all critical parts.

- **Drive and soft starter replacement** involves modernizing equipment by replacing the previous aged or obsolete product with a new one matched to the purpose. The service can be extended with engineering in case the device and process requires more advanced engineering.

Circular economy

- **Spare Parts** are available from our local, regional, and global stocks. Original equipment parts from Schneider Electric are reliable and easily available. They will help to keep your product in operation for longer.

- **Repair** allows you to extend the life of your drive or soft starter. The affected product can be replaced, or repaired on site or at our repair centers, depending on the type of product in question.

- **Fast Exchange by refurbished drive or soft starter** *(1)* gives a second life to inoperative drives or soft starters. In this case, we offer an immediate exchange with a replacement refurbished drive or soft starter and take back the product, repair it, and keep it ready for the next exchange.

- **Take-back and recycling** *(1)* is the last step to improve your environmental impact. Unrepairable products are dismantled, raw materials are collected and given a second life. Up to 85% of the product components can be recycled.

Service contracts secure recovery, availability, and outcome

Service contracts manage the safety and performance of your assets through well-defined maintenance plans tailored to your operational needs. The predefined service contract – Advantage Service Plan – and fully customizable "à la carte" service contract are built from the services in the "Operate" and "Optimize" phases and service levels defining availability, response, and lead times matching your particular needs. You will enjoy priority access to Schneider Electric support when you need it, as well as having an expert partner to plan the long-term evolution of your drives and soft starters.

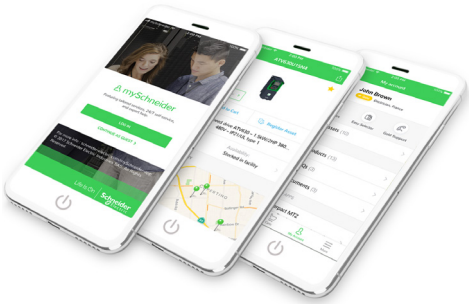

mySchneider app

With the mySchneider app you have easy 24/7 access to product information and expert support. All registered users have access to additional features, such as real-time notifications, order tracking, product pricing, and availability. The mySchneider app is available for download from the IOS and Android app store.

Schneider Electric – helping you succeed

Schneider Electric, the leader in digital transformation of energy management and automation, has operations in more than 100 countries. With this global footprint we have certified field service representatives, regional expert and advanced level support up to product R&D to provide you the right support across the lifecycle of your drives and soft starters. Furthermore, we offer an extensive network of local and global repair centers and a logistics chain that underpins our ability to respond to your needs.

To order services or find out more, please contact your local Schneider Electric service center.

(1) Services available in countries that have the right structure and capabilities.

Altivar Soft Starter ATS430

Soft starters for asynchronous motors

Product reference index

A

ATS430C11S6 18 26 32 33 34 35 37
ATS430C14S6 18 26 32 33 34 35 37
ATS430C17S6 18 26 32 33 34 35 37
ATS430C21S6 18 26 32 33 34 35 37
ATS430C25S6 18 26 32 33 34 35 37
ATS430C32S6 18 26 32 33 34 35 37
ATS430C41S6 18 26 32 33 34 35 37
ATS430C48S6 18 26 32 33 34 35 37
ATS430C59S6 18 26 32 33 34 35 37
ATS430D17S6 18 26 32 33 34 35 37
ATS430D32S6 18 26 32 33 34 35 37
ATS430D47S6 18 26 32 33 34 35 37
ATS430D62S6 18 26 32 33 34 35 37
ATS430D75S6 18 26 32 33 34 35 37
ATS430D88S6 18 26 32 33 34 35 37

D

DF3ER50 34 35
DF3FR100 34 35
DF3FR80 34 35
DF400125 34 35
DF400160 34 35
DF430400 34 35
DF431700 34 35
DF433800 34 35

G

GK1EK 34 35
GS1JD3 34 35
GS1KKD3 34 35
GS1LLD3 34 35
GV1L3 34
GV2L20 32 34 35
GV2L32 32 34 35
GV3L50 34
GV3L65 32 34
GV4L115B 36 40
GV4L115N 32 34 35
GV4L25N 32 35
GV4L50N 32 35
GV4L80B 32 34
GV4L80N 32 35

L

LC1D115B5 32 33 34 35
LC1D115B6 32 33 34 35
LC1D115B7 32 33 34 35
LC1D115BD 32 33 34 35
LC1D115CD 32 33 34 35
LC1D115D5 32 33 34 35
LC1D115D7 32 33 34 35
LC1D115E5 32 33 34 35
LC1D115E6 32 33 34 35
LC1D115E7 32 33 34 35
LC1D115ED 32 33 34 35
LC1D115F5 32 33 34 35
LC1D115F6 32 33 34 35
LC1D115F7 32 33 34 35
LC1D115FD 32 33 34 35
LC1D115FE5 32 33 34 35
LC1D115FE7 32 33 34 35
LC1D115GD 32 33 34 35
LC1D115JD 32 33 34 35
LC1D115M5 32 33 34 35
LC1D115M6 32 33 34 35
LC1D115M7 32 33 34 35
LC1D115MD 32 33 34 35
LC1D115N5 32 33 34 35
LC1D115N7 32 33 34 35
LC1D115ND 32 33 34 35
LC1D115P5 32 33 34 35
LC1D115P7 32 33 34 35
LC1D115Q5 32 33 34 35
LC1D115Q6 32 33 34 35
LC1D115Q7 32 33 34 35
LC1D115R5 32 33 34 35
LC1D115R6 32 33 34 35
LC1D115R7 32 33 34 35
LC1D115S5 32 33 34 35
LC1D115S7 32 33 34 35
LC1D115SD 32 33 34 35
LC1D115U5 32 33 34 35
LC1D115U6 32 33 34 35
LC1D115U7 32 33 34 35
LC1D115V5 32 33 34 35
LC1D115V7 32 33 34 35
LC1D150B5 32 33 34 35
LC1D150B6 32 33 34 35
LC1D150B7 32 33 34 35
LC1D150BD 32 33 34 35
LC1D150CD 32 33 34 35
LC1D150D5 32 33 34 35
LC1D150D7 32 33 34 35
LC1D150E5 32 33 34 35
LC1D150E6 32 33 34 35
LC1D150E7 32 33 34 35
LC1D150ED 32 33 34 35
LC1D150F5 32 33 34 35
LC1D150F6 32 33 34 35
LC1D150F7 32 33 34 35
LC1D150FD 32 33 34 35

LC1D150FE5 32 33 34 35
LC1D150FE7 32 33 34 35
LC1D150GD 32 33 34 35
LC1D150JD 32 33 34 35
LC1D150M5 32 33 34 35
LC1D150M6 32 33 34 35
LC1D150M7 32 33 34 35
LC1D150MD 32 33 34 35
LC1D150N5 32 33 34 35
LC1D150N7 32 33 34 35
LC1D150ND 32 33 34 35
LC1D150P5 32 33 34 35
LC1D150P7 32 33 34 35
LC1D150Q5 32 33 34 35
LC1D150Q6 32 33 34 35
LC1D150Q7 32 33 34 35
LC1D150R5 32 33 34 35
LC1D150R6 32 33 34 35
LC1D150R7 32 33 34 35
LC1D150S5 32 33 34 35
LC1D150S7 32 33 34 35
LC1D150SD 32 33 34 35
LC1D150U5 32 33 34 35
LC1D150U6 32 33 34 35
LC1D150U7 32 33 34 35
LC1D150V5 32 33 34 35
LC1D150V7 32 33 34 35
LC1D18AL 32 33
LC1D18B5 32 33
LC1D18B7 32 33
LC1D18BD 32 33
LC1D18BL 32 33
LC1D18CD 32 33
LC1D18D5 32 33
LC1D18D7 32 33
LC1D18E5 32 33
LC1D18E7 32 33
LC1D18ED 32 33
LC1D18EL 32 33
LC1D18F7 32 33
LC1D18FD 32 33
LC1D18FE7 32 33
LC1D18FL 32 33
LC1D18GD 32 33
LC1D18JD 32 33
LC1D18JL 32 33
LC1D18M7 32 33
LC1D18MD 32 33
LC1D18ML 32 33
LC1D18N7 32 33
LC1D18ND 32 33
LC1D18P5 32 33
LC1D18P7 32 33
LC1D18Q7 32 33
LC1D18R7 32 33
LC1D18RD 32 33
LC1D18S7 32 33
LC1D18SD 32 33
LC1D18U7 32 33
LC1D18UD 32 33
LC1D18UL 32 33
LC1D18V7 32 33
LC1D18ZL 32 33
LC1D25AL 34 35
LC1D25B5 34 35
LC1D25B7 34 35
LC1D25BD 34 35
LC1D25BL 34 35
LC1D25CD 34 35
LC1D25D5 34 35
LC1D25D7 34 35
LC1D25E5 34 35
LC1D25E7 34 35
LC1D25ED 34 35
LC1D25EL 34 35
LC1D25F7 34 35
LC1D25FD 34 35
LC1D25FE7 34 35
LC1D25FL 34 35
LC1D25GD 34 35
LC1D25JD 34 35
LC1D25JL 34 35
LC1D25M7 34 35
LC1D25MD 34 35
LC1D25ML 34 35
LC1D25N7 34 35
LC1D25ND 34 35
LC1D25P5 34 35
LC1D25P7 34 35
LC1D25Q7 34 35
LC1D25R7 34 35
LC1D25RD 34 35
LC1D25S7 34 35
LC1D25SD 34 35
LC1D25U7 34 35
LC1D25UD 34 35
LC1D25UL 34 35
LC1D25V7 34 35
LC1D25ZL 34 35
LC1D32AL 32 34 35
LC1D32B5 32 34 35
LC1D32B7 32 34 35
LC1D32BD 32 34 35
LC1D32BL 32 34 35
LC1D32CD 32 34 35
LC1D32D5 32 34 35
LC1D32D7 32 34 35
LC1D32E5 32 34 35
LC1D32E7 32 34 35
LC1D32ED 32 34 35
LC1D32EL 32 34 35
LC1D32F7 32 34 35
LC1D32FD 32 34 35
LC1D32FE7 32 34 35
LC1D32FL 32 34 35
LC1D32GD 32 34 35
LC1D32JD 32 34 35
LC1D32JL 32 34 35
LC1D32M7 32 34 35
LC1D32MD 32 34 35
LC1D32ML 32 34 35
LC1D32N7 32 34 35
LC1D32ND 32 34 35
LC1D32P5 32 34 35
LC1D32P7 32 34 35
LC1D32Q7 32 34 35
LC1D32R7 32 34 35
LC1D32RD 32 34 35
LC1D32S7 32 34 35
LC1D32SD 32 34 35
LC1D32U7 32 34 35
LC1D32UD 32 34 35
LC1D32UL 32 34 35
LC1D32V7 32 34 35
LC1D32ZL 32 34 35
LC1D40AB5 32
LC1D40AB7 32
LC1D40ABBE 32
LC1D40ABNE 32
LC1D40AD5 32
LC1D40AD7 32
LC1D40AE5 32
LC1D40AE7 32
LC1D40AEHE 32
LC1D40AF7 32
LC1D40AFE7 32
LC1D40AJD 32
LC1D40AKUE 32
LC1D40AM7 32

LC1D40AN7 32
LC1D40AP5 32
LC1D40AP7 32
LC1D40AQ7 32
LC1D40AR7 32
LC1D40ARD 32
LC1D40AS7 32
LC1D40AU7 32
LC1D40AV7 32
LC1D50AB5 32, 34
LC1D50AB7 32, 34
LC1D50ABBE 32, 34
LC1D50ABNE 32, 34
LC1D50AD5 32, 34
LC1D50AD7 32, 34
LC1D50AE5 32, 34
LC1D50AE7 32, 34
LC1D50AEHE 32, 34
LC1D50AF7 32, 34
LC1D50AFE7 32, 34
LC1D50AJD 32, 34
LC1D50AKUE 32, 34
LC1D50AM7 32, 34
LC1D50AN7 32, 34
LC1D50AP5 32, 34
LC1D50AP7 32, 34
LC1D50AQ7 32, 34
LC1D50AR7 32, 34
LC1D50ARD 32, 34
LC1D50AS7 32, 34
LC1D50AU7 32, 34
LC1D50AV7 32, 34
LC1D150R5 32, 34
LC1D150R6 32, 34
LC1D150R7 32, 34
LC1D150S5 32, 34
LC1D150S7 32, 34
LC1D150SD 32, 34
LC1D150U5 32, 34
LC1D150U6 32, 34
LC1D150U7 32, 34
LC1D150V5 32, 34
LC1D150V7 32, 34
LC1D65AB5 32, 33, 34, 35
LC1D65AB7 32, 33, 34, 35
LC1D65ABBE 32, 33, 34, 35
LC1D65ABNE 32, 33, 34, 35
LC1D65AD5 32, 33, 34, 35
LC1D65AD7 32, 33, 34, 35
LC1D65AE5 32, 33, 34, 35
LC1D65AE7 32, 33, 34, 35
LC1D65AEHE 32, 33, 34, 35
LC1D65AF7 32, 33, 34, 35
LC1D65AFE7 32, 33, 34, 35
LC1D65AJD 32, 33, 34, 35
LC1D65AKUE 32, 33, 34, 35
LC1D65AM7 32, 33, 34, 35
LC1D65AN7 32, 33, 34, 35
LC1D65AP5 32, 33, 34, 35
LC1D65AP7 32, 33, 34, 35
LC1D65AQ7 32, 33, 34, 35
LC1D65AR7 32, 33, 34, 35
LC1D65ARD 32, 33, 34, 35
LC1D65AS7 32, 33, 34, 35
LC1D65AU7 32, 33, 34, 35
LC1D65AV7 32, 33, 34, 35
LC1D80B5 32, 33, 34, 35
LC1D80B6 32, 33, 34, 35
LC1D80B7 32, 33, 34, 35
LC1D80BD 32, 33, 34, 35
LC1D80BW 32, 33, 34, 35
LC1D80CD 32, 33, 34, 35
LC1D80CW 32, 33, 34, 35
LC1D80D5 32, 33, 34, 35
LC1D80D7 32, 33, 34, 35
LC1D80E5 32, 33, 34, 35
LC1D80E6 32, 33, 34, 35
LC1D80E7 32, 33, 34, 35
LC1D80ED 32, 33, 34, 35
LC1D80EW 32, 33, 34, 35
LC1D80F5 32, 33, 34, 35
LC1D80F6 32, 33, 34, 35
LC1D80F7 32, 33, 34, 35
LC1D80FD 32, 33, 34, 35
LC1D80FE5 32, 33, 34, 35
LC1D80FE7 32, 33, 34, 35
LC1D80FW 32, 33, 34, 35
LC1D80GD 32, 33, 34, 35
LC1D80JD 32, 33, 34, 35
LC1D80JW 32, 33, 34, 35
LC1D80M5 32, 33, 34, 35
LC1D80M6 32, 33, 34, 35
LC1D80M7 32, 33, 34, 35
LC1D80MD 32, 33, 34, 35
LC1D80MW 32, 33, 34, 35
LC1D80N5 32, 33, 34, 35
LC1D80N7 32, 33, 34, 35
LC1D80ND 32, 33, 34, 35
LC1D80P5 32, 33, 34, 35
LC1D80P7 32, 33, 34, 35
LC1D80Q5 32, 33, 34, 35
LC1D80Q6 32, 33, 34, 35
LC1D80Q7 32, 33, 34, 35
LC1D80R5 32, 33, 34, 35
LC1D80R6 32, 33, 34, 35
LC1D80R7 32, 33, 34, 35
LC1D80RD 32, 33, 34, 35
LC1D80S5 32, 33, 34, 35
LC1D80S7 32, 33, 34, 35
LC1D80SD 32, 33, 34, 35
LC1D80SW 32, 33, 34, 35
LC1D80U5 32, 33, 34, 35
LC1D80U6 32, 33, 34, 35
LC1D80U7 32, 33, 34, 35
LC1D80UD 32, 33, 34, 35
LC1D80V5 32, 33, 34, 35
LC1D80V7 32, 33, 34, 35
LC1G185BEEA 32, 33, 34, 35

LC1G185EHEN 32 33 34 35
LC1G185KUEN 32 33 34 35
LC1G185LSEA 32 33 34 35
LC1G225BEEA 32 33 34 35
LC1G225EHEN 32 33 34 35
LC1G225KUEN 32 33 34 35
LC1G225LSEA 32 33 34 35
LC1G265BEEA 32 33 34 35
LC1G265EHEN 32 33 34 35
LC1G265KUEN 32 33 34 35
LC1G265LSEA 32 33 34 35
LC1G330BEEA 32 34
LC1G330EHEN 32 34
LC1G330KUEN 32 34
LC1G330LSEA 32 34
LC1G400BEEA 32 33 34 35
LC1G400EHEN 32 33 34 35
LC1G400KUEN 32 33 34 35
LC1G400LSEA 32 33 34 35
LC1G500BEEA 32 34
LC1G500EHEN 32 34
LC1G500KUEN 32 34
LC1G500LSEA 32 34
LC1G630BEEA 32 33 34 35
LC1G630EHEN 32 33 34 35
LC1G630KUEN 32 33 34 35
LC1G800BEEA 35
LC1G800EHEN 35
LC1G800KUEN 35
LU9GC3 24 28

T

TCSMCNAM3M002P 29
TCSXCNAMUM3P 24

V

VW3A1104R10 22 24
VW3A1104R30 22 24
VW3A1105 29
VW3A1111 23
VW3A1112 24
VW3A1113 21
VW3A1114 22
VW3A8127 29
VW3A8306D30 28
VW3A8306DR 28
VW3A8306DRC 28
VW3A8306R 28
VW3A8306R03 24 28
VW3A8306R10 24 28
VW3A8306R30 24 28
VW3A8306RC 24 28
VW3A8306TF03 24 28
VW3A8306TF10 24 28
VW3G4701 26 30
VW3G4702 26 30
VW3G4703 26 30
VX4G4301 19
VX4G4302 19
VZ1L015UM17T 26 30 37
VZ1L040U600T 26 30 37
VZ1L070U350T 26 30 37
VZ1L150U170T 26 30 37
VZ1L250U100T 26 30 37
VZ1L325U075T 26 30 37
VZ1L530U045T 26 30 37
VZ1LM10U024T 26 30 37
VZ3V4902 19
VZ3V4903 5 19

Z

ZB5AZ905 22 24

Legal information

The information provided in this Catalog contains description of Schneider Electric products, solutions and services ("Offer") with technical specifications and technical characteristics of the performance of the corresponding Offer.

The content of this document is subject to revision at any time without notice due to continued progress in methodology, design and manufacturing.

To the extent permitted by applicable law, no responsibility or liability is assumed by Schneider Electric and its subsidiaries for any type of damages arising out of or in connection with (i) informational content of this Catalog not conforming with or exceeding the technical specifications, or (ii) any error contained in this Catalog, or (iii) any use, decision, act or omission made or taken on basis of or in reliance on any information contained or referred to in this Catalog.

SCHNEIDER ELECTRIC MAKES NO WARRANTY OR REPRESENTATION OF ANY KIND, WHETHER EXPRESS OR IMPLIED, AS TO WHETHER THIS CATALOG OR ANY INFORMATION CONTAINED THEREIN SUCH AS PRODUCTS AND SERVICES WILL MEET REQUIREMENTS, EXPECTATIONS OR PURPOSE OF ANY PERSON MAKING USE THEREOF.

Schneider Electric brand and any trademarks of Schneider Electric and its subsidiaries referred to in this Catalog are property of Schneider Electric or its subsidiaries. All other brands are trademarks of their respective owners.

This Catalog and its content are protected under applicable copyright laws and provided for informative use only. No part of this Catalog may be reproduced or transmitted in any form or by any means (electronic, mechanical, photocopying, recording, or otherwise), for any purpose, without the prior written permission of Schneider Electric.

Copyright, intellectual, and all other proprietary rights in the content of this Catalog (including but not limited to software, audio, video, text, and photographs) rests with Schneider Electric or its licensors. All rights in such content not expressly granted herein are reserved. No rights of any kind are licensed or assigned or shall otherwise pass to persons accessing this information.

Life Is On | Schneider Electric

Life Is On | Schneider Electric

Learn more about our products at www.se.com

The information provided in this documentation contains general descriptions and/or technical characteristics of the performance of the products contained herein. This documentation is not intended as a substitute for and is not to be used for determining suitability or reliability of these products for specific user applications. It is the duty of any such user or integrator to perform the appropriate and complete risk analysis, evaluation and testing of the products with respect to the relevant specific application or use thereof. Neither Schneider Electric nor any of its affiliates or subsidiaries shall be responsible or liable for misuse of the information contained herein.

Design: Schneider Electric
Photos: Schneider Electric

Schneider Electric Industries SAS
Head Office
35, rue Joseph Monier - CS 30323
F-92500 Rueil-Malmaison Cedex
France

DIA2ED2240602EN
December 2024 - V1.0

AN ENGENHARIA

Atestado de Capacidade Técnica

Atestamos para os devidos fins e efeitos legais, que a **Vale Automação Industrial LTDA**, empresa estabelecida na cidade de Blumenau estado de Santa Catarina, sito na Rua: General Osório, n°4584 Bairro Salto Weissbach **inscrita no CNPJ: 09.504.672/0001-09**, forneceu produtos compatíveis com objeto da nossa necessidade, sendo **4 - Disjuntores Tripolar 800A, 8 - Soft Starter - 410A 208 A 600V - 210A 208 A 600V.**

Registramos ainda que as entregas dos produtos acima referidos apresentaram bom desempenho operacional, tendo a empresa cumprindo fielmente com suas obrigações nada constando que desabone tecnicamente e comercialmente, até a presente data.

Recife, 15/01/2024

A DO NASCIMENTO SERVICOS DE INSTALACOES EIRELI:28114503000107

Assinado de forma digital por A DO NASCIMENTO SERVICOS DE INSTALACOES EIRELI:28114503000107
Dados: 2024.01.15 09:38:00 -03'00'

AN ENGENHARIA

Administradora: Aline do Nascimento

CPF: 083.729.097-09

PORTO TRAPICHE

Atestado de Capacidade Técnica

CONDOMINIO PORTO TRAPICHE RESIDENCE, SITUADA NA AV LAFAYETE COUTINHO, Nº 496, COMERCIO, SALVADOR-BA, CEP 40015-160.

Atesta para os devidos fins e efeitos legais, que a Vale Automação Industrial LTDA, empresa estabelecida na cidade de Blumenau estado de Santa Catarina, sito na Rua: General Osório,n°4584 Bairro Salto Weissbach, inscrita no CNPJ:09.504.672/0001-09, forneceu produtos compatíveis com objeto da nossa necessidade, sendo SOFT STARTERS DO FABRICANTE SCHNEIDER ELECTRIC.

Registramos ainda que as entregas dos produtos acima referidos apresentaram bom desempenho operacional, tendo a empresa cumprindo fielmente com suas obrigações nada constando que desabone tecnicamente e comercialmente, até a presente data.

Salvador ,30/05/2025

VIVIAM DE OLIVEIRA SILVA
GERENTE
COND. PORTO TRAPICHE RESIDENCE
CNPJ 07.479.509/0001-08

Número: **CCQ – ATF –1132–2025**

Recife, 02 de junho de 2025

Atestamos para os devidos fins, que a empresa **VALE AUTOMACAO INDUSTRIAL LTDA**, CNPJ: **09.504.672/0001-09**, situada na Rua General Osório, nº 4584, bairro Salto Weissbach, Galpão 16 Fundos Sala 01, Blumenau - SC, CEP: 89032-240. **FORNECEU SATISFATORIAMENTE** a COMPANHIA PERNAMBUCANA DE SANEAMENTO – COMPESA, CNPJ: 09.769.035/0001-64, os produtos descriminados abaixo, tendo:

- Atendido as exigências do edital quanto as Especificações técnicas;
- Atendido as exigências do edital quanto ao Prazo de Entrega.

Outrossim, informamos que não consta em nossos registros nada que desabone sua capacidade técnica e conduta comercial.

A COMPESA não se responsabiliza pela qualidade dos produtos que o fornecedor venha a fornecer a terceiros.

Ordem de compra: 106630			
Ata de registro de preço (ARP): 160/24 **Data:** 12/11/2024 **até** 07/11/2025			
Licitação Compesa (LC): 148/2024			
Código do Produto	**Descrição Longa**	**Und.**	**Qtd.**

3206110100	INVERSOR DE FREQUENCIA SHNEIDER ELETRIC, SERIE ATV 630 C25N4, POTENCIA NOMINAL 250KW - 400HP TENSAO DE REDE 300 - 480V FREQUENCIA DE ENTRADA 60Hz COM IHM E CABO DE CONEXAO	un	2

Ordem de compra: 106658

Ata de registro de preço (ARP): 160/24 **Data:** 12/11/2024 **até** 07/11/2025

Licitação Compesa (LC): 148/2024

Código do Produto	Descrição Longa	Und.	Qtd.
3206110089	INVERSOR DE FREQUENCIA160kW / 250HP 380V, IP21, REF. ATV630C16N4 - SCHNEIDER	un	2
3206110089	INVERSOR DE FREQUENCIA160kW / 250HP 380V, IP21, REF. ATV630C16N4 - SCHNEIDER	un	3

Ordem de compra: 106659

Ata de registro de preço (ARP): 160/24 **Data:** 12/11/2024 **até** 07/11/2025

Licitação Compesa (LC): 148/2024

Código do Produto	Descrição Longa	Und.	Qtd.
3206110100	INVERSOR DE FREQUENCIA SHNEIDER ELETRIC, SERIE ATV 630 C25N4, POTENCIA NOMINAL 250KW - 400HP TENSAO DE REDE 300 - 480V FREQUENCIA DE ENTRADA 60Hz COM IHM E CABO DE CONEXAO	un	2

3206110100	INVERSOR DE FREQUENCIA SHNEIDER ELETRIC, SERIE ATV 630 C25N4, POTENCIA NOMINAL 250KW - 400HP TENSAO DE REDE 300 - 480V FREQUENCIA DE ENTRADA 60Hz COM IHM E CABO DE CONEXAO	un	2

Abaixo assina(m) o(s) responsável(eis) pelo Atestado de Fornecimento.

Documento assinado eletronicamente por **Amaro Pereira Borges Junior**, em 02/06/2025, às 11:20, conforme horário oficial de Recife, com fundamento no art. 10º, do Decreto nº 45.157, de 23 de outubro de 2017.

A autenticidade deste documento pode ser conferida no site http://sei.pe.gov.br/sei/controlador_externo.php?acao=documento_conferir&id_orgao_acesso_externo=0, informando o código verificador **67907374** e o código CRC **84BA3967**.

COMPANHIA PERNAMBUCANA DE SANEAMENTO

Av. Cruz Cabugá, 1387, - Bairro Santo Amaro, Recife/PE - CEP 50040-000, Telefone:

Product datasheet

Specifications

Soft starter, Altistart 480, 660A, 208 to 690V AC, control supply 110 to 230V AC

ATS480C66Y

EAN Code: 3606481089168

Price: 8.010,00 EUR

Main

Range of product	Altivar Soft Starter ATS480
Product or component type	Soft starter
Product destination	Asynchronous motors
Product specific application	Process and infrastructures
Device short name	ATS480
Network number of phases	3 phases
Utilisation category	AC-3A AC-53A
Ue power supply voltage	208...690 V - 15...10 %
power supply frequency	50...60 Hz - 20...20 %
[Ie] rated operational current	Normal duty: 660.0 A (at <40 °C)
rated current in heavy duty	590.0 A at 40 °C for heavy duty
Torque control	True
IP degree of protection	IP00
Motor power kW	160.0 kW at 230 V in the motor supply line heavy duty 355.0 kW at 400 V in the motor supply line normal duty 315.0 kW at 400 V in the motor supply line heavy duty 400.0 kW at 440 V in the motor supply line normal duty 355.0 kW at 440 V in the motor supply line heavy duty 400.0 kW at 500 V in the motor supply line heavy duty 400.0 kW at 525 V in the motor supply line heavy duty 630.0 kW at 660 V in the motor supply line normal duty 560.0 kW at 660 V in the motor supply line heavy duty 630.0 kW at 690 V in the motor supply line normal duty 560.0 kW at 690 V in the motor supply line heavy duty 315.0 kW at 230 V to the motor delta terminals normal duty 500.0 kW at 400 V to the motor delta terminals normal duty 400.0 kW at 400 V to the motor delta terminals heavy duty
Motor power hp	200.0 hp at 208 V normal duty 250.0 hp at 230 V normal duty 200.0 hp at 230 V heavy duty 500.0 hp at 460 V normal duty 400.0 hp at 460 V heavy duty 600.0 hp at 575 V normal duty 500.0 hp at 575 V heavy duty
Option card	Communication module for Profibus DP V1 Communication module for Modbus TCP/EtherNet/IP Communication module for CANopen daisy chain Communication module for CANopen Sub-D Communication module for CANopen open style Communication module for PROFINET

Complementary

Rates duty January 2016

Disclaimer: This documentation is not intended as a substitute for and is not to be used for determining suitability or reliability of these products for specific user applications

Device connection	In the motor supply line To the motor delta terminals
[Us] control circuit voltage	110...230 V AC 50/60 Hz - 15...10 %
Apparent power	0.125 kVA
Integrated motor overload protection	True
motor thermal protection class	Class 10E
Protection type	Phase failure: line Integrated thermal protection: motor Thermal protection: starter Current overload: motor Underload: motor Excessive starting time, locked rotor: motor Motor phase loss: motor Line supply phase loss: line Line supply phase loss: motor Thermal protection: motor
current limiting %In (5 x Ie maximum)	150…700 %
Rated current pwr loss specification	660.0 A
Power loss static current independent	25.0 W
Power loss per device current dependent	1938.0 W
Standards	IEC 60947-4-2 UL 60947-4-2 IEC 60664-1
Product certifications	CE cULus CCC UKCA RCM EAC DNV ABS BV CCS
Marking	CE CCC UKCA EAC RCM CULus
[Uc] control circuit voltage	24 V DC
Discrete input number	4
Discrete input type	(STOP) logic inputs, 3500 Ohm (RUN) logic inputs, 3500 Ohm (DI3) programmable as logic input, 3500 Ohm (DI4) programmable as logic input, 3500 Ohm
Input compatibility	STOP: discrete input level 1 PLC conforming to IEC 61131-2 RUN: discrete input level 1 PLC conforming to IEC 61131-2 DI3: discrete input level 1 PLC conforming to IEC 61131-2 DI4: discrete input level 1 PLC conforming to IEC 61131-2
Discrete input logic	Programmable digital input at State 0: < 5 V
Relay output number	3
Relay output type	Relay outputs R1A 1 NO Relay outputs R1B 1 NO Relay outputs RIC NO/NC programmable
Minimum switching current	100 mA at 12 V DC for relay outputs

Maximum switching current	Relay outputs 2 A at 250 V AC Relay outputs 2 A at 30 V DC Relay outputs
Discrete output number	2
Discrete output type	(DQ1) programmable digital output <= 30 V (DQ2) programmable digital output <= 30 V
Output compatibility	Open collector level 1 PLC conforming to IEC 65A-68
Analogue input number	1
Analogue input type	AI1/PTC PTC/Pt 100 temperature probe PTC2 PTC/Pt 100 temperature probe PTC3 PTC/Pt 100 temperature probe
Analogue output number	1
Analogue output type	Current output AQ1: 0...20 mA or 0...10 V, impedance <500 Ohm
Communication port protocol	Modbus serial
Connector type	1 RJ45
Communication data link	Serial
Physical interface	2-wire RS 485
Transmission rate	1200...256000 bit/s
Transmission frame	RTU
Data format	8 bits, configurable odd, even or no parity
Type of polarization	No impedance for Modbus serial
Number of addresses	0…227 for Modbus serial
Method of access	Slave Modbus serial
Function available	External bypass control Pre-heating Smoke extraction Multi-motor cascade Second motor set User management Ports and services hardening Security event logging Cybersecure firmware update Single direction
Display screen available	True
Operating position	Vertical +/- 10 degree
Height	670.0 mm
Width	400.0 mm
Depth	314.0 mm
Net weight	51.4 kg

Environment

Electromagnetic compatibility	Conducted and radiated emissions level A conforming to IEC 60947-4-2 Conducted and radiated emissions with bypass level B conforming to IEC 60947-4-2 Damped oscillating waves level 3 conforming to IEC 61000-4-12 Electrostatic discharge level 3 conforming to IEC 61000-4-11 Immunity to electrical transients level 4 conforming to IEC 61000-4-4 Immunity to radiated radio-electrical interference level 3 conforming to IEC 61000-4-3 Voltage/current impulse level 3 conforming to IEC 61000-4-5
pollution degree	Level 3
[Uimp] rated impulse withstand voltage	6 kV

[Ui] rated insulation voltage	690 V
Environmental class (during operation)	Class 3C3 according to IEC 60721-3-3 Class 3S2 according to IEC 60721-3-3
Relative humidity	0…95 % without condensation or dripping water conforming to IEC 60068-2-3
Ambient air temperature for operation	40…60 °C (with current derating of 2 % per °C) -15…40 °C (without derating)
Ambient air temperature for storage	-25…70 °C
Operating altitude	<= 1000 m without derating > 1000...4000 m with current derating 1 % per 100 m
Maximum deflection under vibratory load (during operation)	1.5 mm at 2...13 Hz
Maximum deflection under vibratory load (during storage)	1.75 mm at 2...9 Hz
Maximum deflection under vibratory load (during transport)	1.75 mm at 2...9 Hz
Maximum acceleration under vibrational stress (during operation)	10 m/s² at 13...200 Hz
Maximum acceleration under vibratory load (during storage)	15 m/s² at 200...500 Hz 10 m/s² at 9...200 Hz
Maximum acceleration under vibratory load (during transport)	15 m/s² at 200...500 Hz 10 m/s² at 9...200 Hz
Maximum acceleration under shock impact (during operation)	150 m/s² at 11 ms
Maximum acceleration under shock load (during storage)	100 m/s² at 11 ms
Maximum acceleration under shock load (during transport)	100 m/s² at 11 ms

Packing Units

Unit Type of Package 1	PCE
Number of Units in Package 1	1
Package 1 Height	55.0 cm
Package 1 Width	53.0 cm
Package 1 Length	81.0 cm
Package 1 Weight	63.0 kg

Environmental Data

Schneider Electric aims to achieve Net Zero status by 2050 through supply chain partnerships, lower impact materials, and circularity via our ongoing “Use Better, Use Longer, Use Again” campaign to extend product lifetimes and recyclability.

Environmental Data explained >

How we assess product sustainability >

Environmental footprint

Carbon footprint (kg.eq.CO2 per CR, Total Life cycle)	**46787**
Environmental Disclosure	**Product Environmental Profile**

Use Better

Materials and Substances

Packaging made with recycled cardboard	**Yes**
Packaging without single use plastic	**No**
EU RoHS Directive	**Pro-active compliance (Product out of EU RoHS legal scope)**
SCIP Number	**4a414825-09af-4572-9f8d-eb756d062409**
REACh Regulation	**REACh Declaration**

Use Again

Repack and remanufacture

Circularity Profile	**End of Life Information**
Take-back	**No**
WEEE	**The product must be disposed on European Union markets following specific waste collection and never end up in rubbish bins**

Dimensions Drawings

Dimensions

Front, Side and Rear View

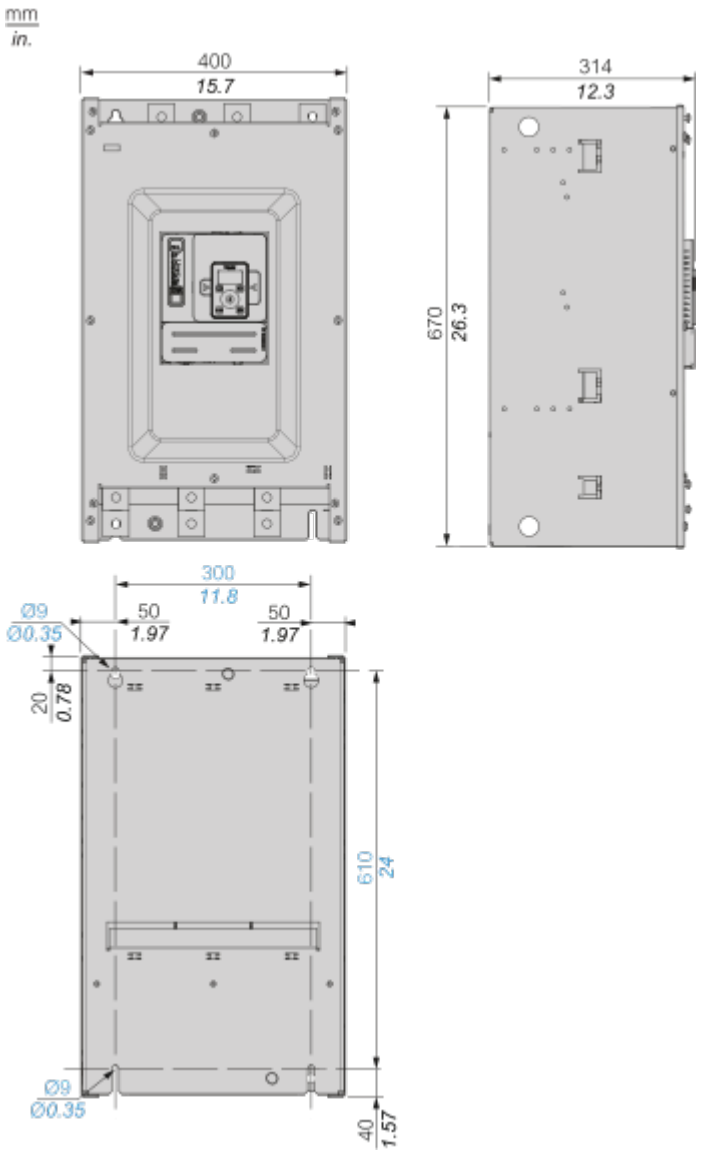

Connections and Schema

Power Connections

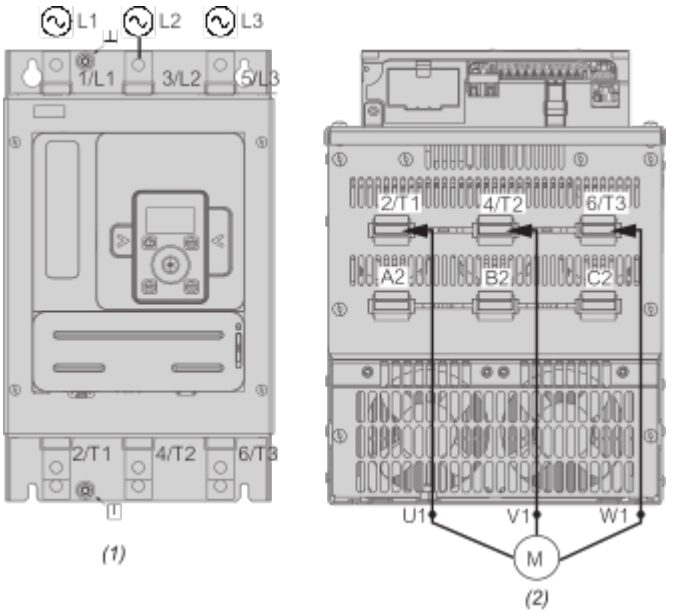

(1) : Mains side
(2) : Motor side
1/L1, 3/L2, 5/L3 : Mains supply inputs
2/T1, 4/T2, 6/T3 : Outputs to motor
A2, B2, C2 : Soft starter bypass

Connection in line, with line contactor, no bypass, type 1 or 2 coordination, non - reversing, 2-wire or 3-wire control

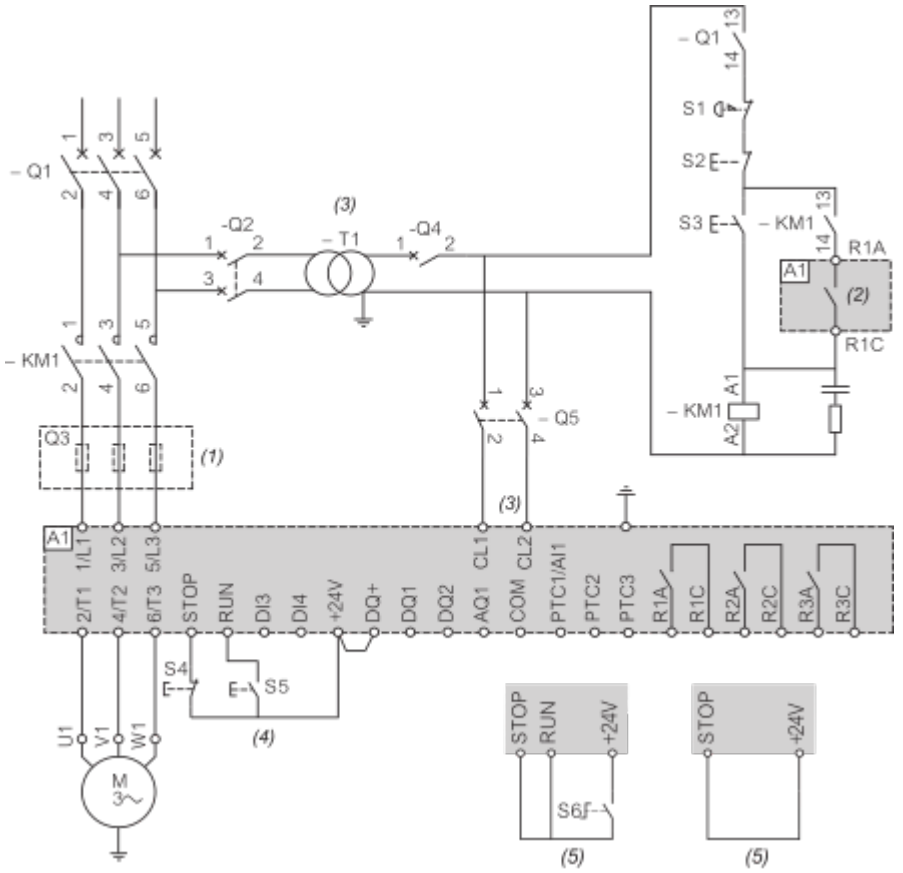

(1) : Installation of additional fast-acting fuses to upgrade to type 2 coordination according to IEC 60947–4–2.
(2) : Take into account the electrical characteristics of the relays (Control Terminal Characteristics).
(3) : The transformer must supply 110...230 VAC +10% — 15%, 50/60Hz.
(4) : RUN and STOP Management (3-wire control).
(5) : RUN and STOP Management (2-wire control).

Connection in line, with line and bypass contactor, freewheel or controlled stop, type 1 or 2 coordination, non reversing, 2-wire or 3-wire

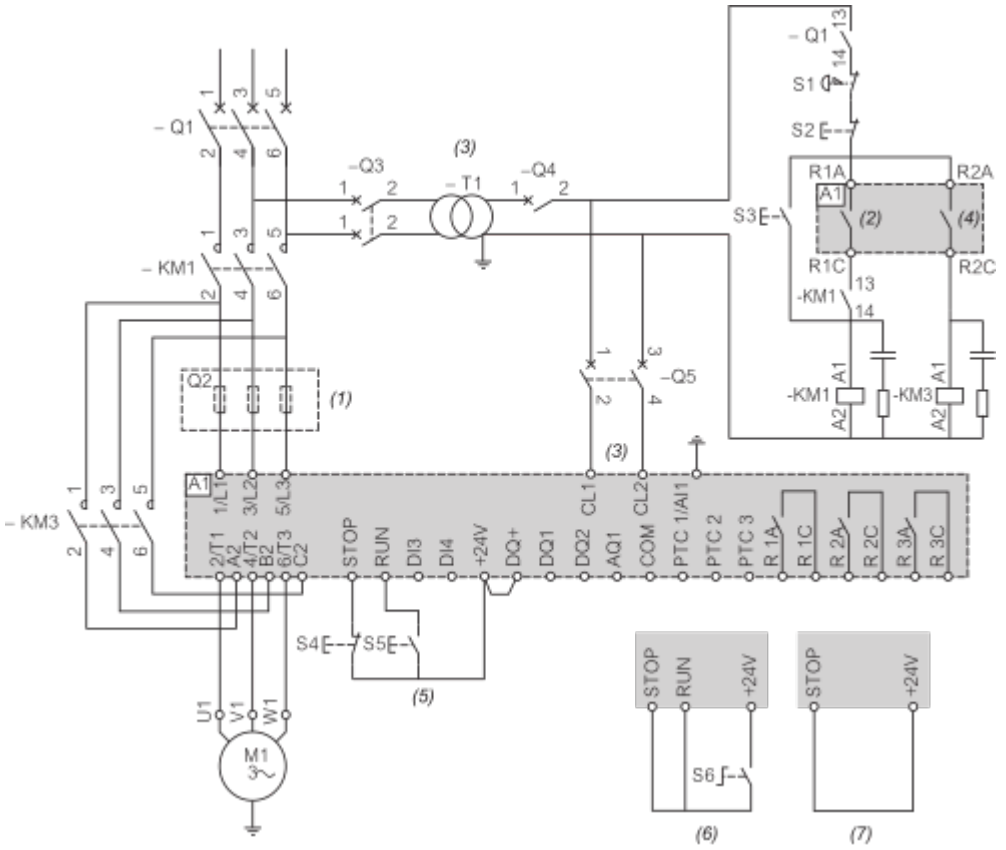

(1) : Installation of additional fast-acting fuses to upgrade to type 2 coordination according to IEC 60947–4–2.
(2) : Take into account the electrical characteristics of the relays (Control Terminal Characteristics).
(3) : The transformer must supply 110...230 VAC +10% – 15%, 50/60Hz.
(4) : Take into account the electrical characteristics of the relays, especially when connecting to high rating contactor (Control Terminal Characteristics).
(5) : RUN and STOP Management (3-wire control).
(6) : RUN and STOP Management (2-wire control).
(7) : PC or PLC control

Connection inside the delta, with line and bypass contactor, type 1 and 2 coordination, non reversing, 2 wire or 3 wire

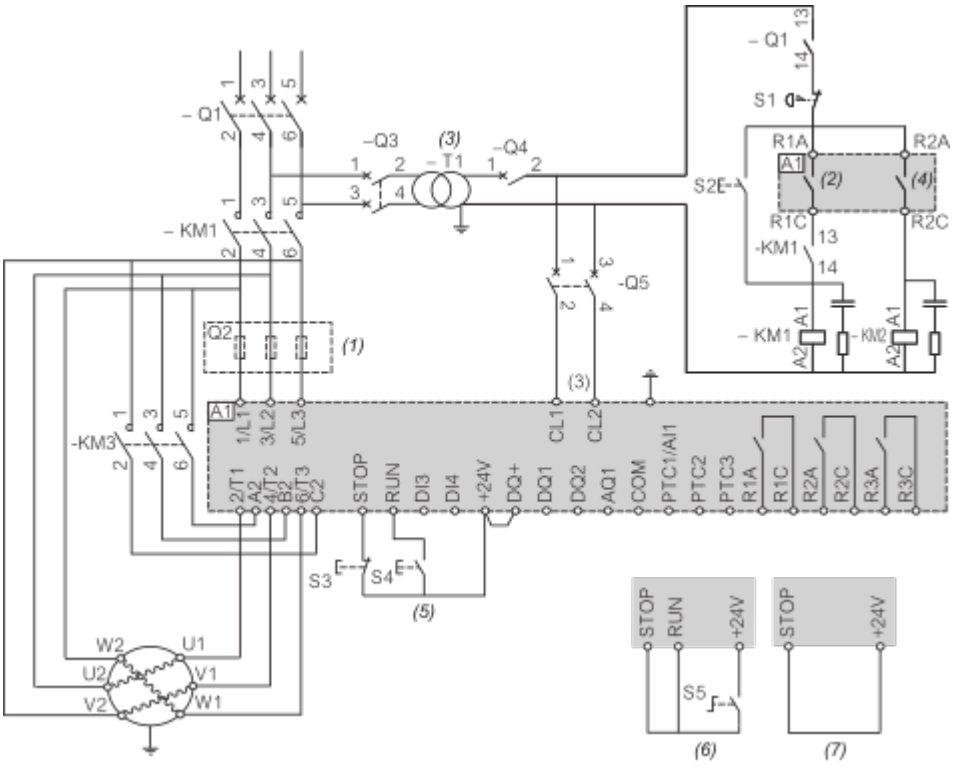

(1) : Installation of additional fast-acting fuses to upgrade to type 2 coordination according to IEC 60947–4–2.
(2) : Take into account the electrical characteristics of the relays (Control Terminal Characteristics).
(3) : The transformer must supply 110...230 VAC +10% – 15%, 50/60Hz.
(4) : Take into account the electrical characteristics of the relays, especially when connecting to high rating contactor (Control Terminal Characteristics).
(5) : RUN and STOP Management (3-wire control).
(6) : RUN and STOP Management (2-wire control).
(7) : PC or PLC control

Control block wiring diagram

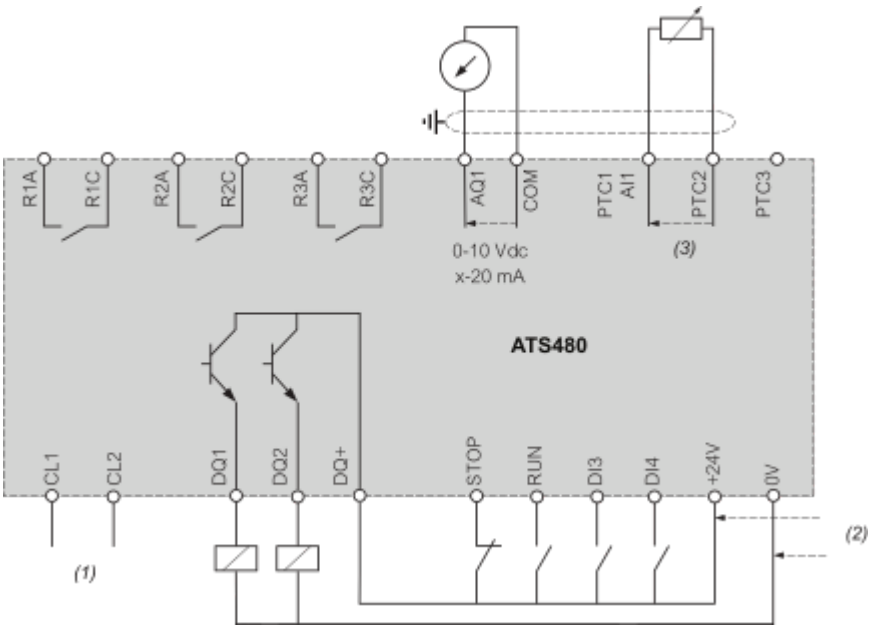

(1) : Control power supply 110-230 VAC
(2) : External supply 24 VDC
(3) : 2 Wires PTC/PT100
R1A, R1C, R3A, R3C : Sequence relay
R2A, R2C : End of start
STOP, RUN, DI3, DI4 : Digital inputs
AQ1 : Analogue output
PTC1/AI1, PTC2, PTC3 : PTC or PT100 connection
DQ1, DQ2, DQ+ : Digital outputs

Mounting and Clearance

Mounting Position

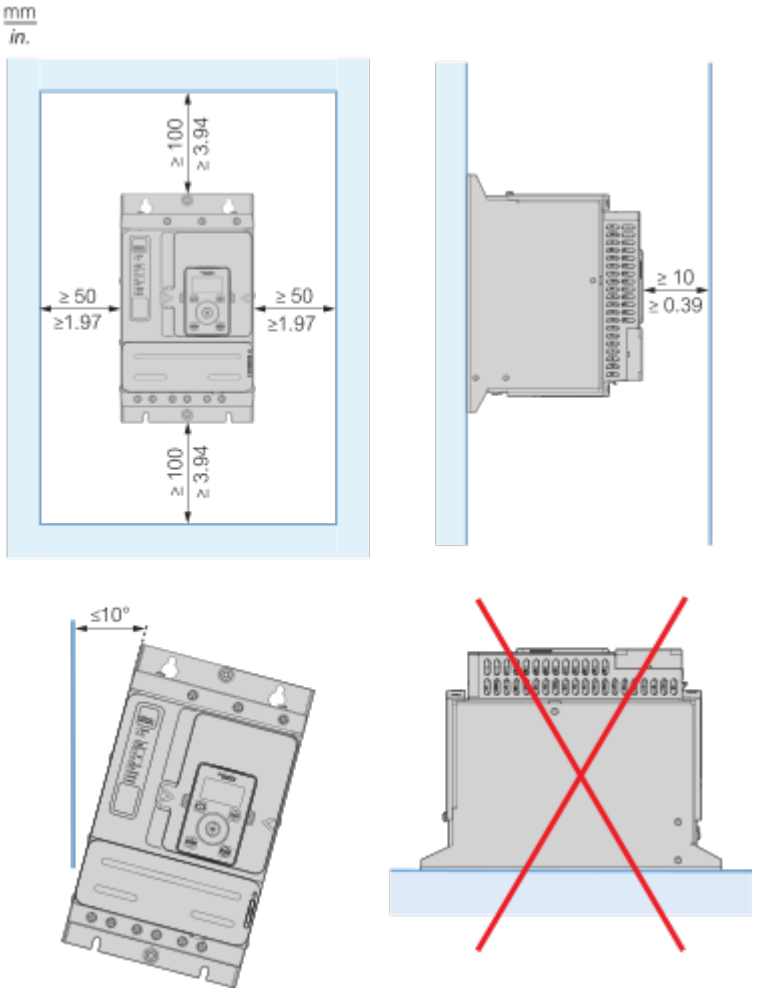

Technical Illustration

Dimensions

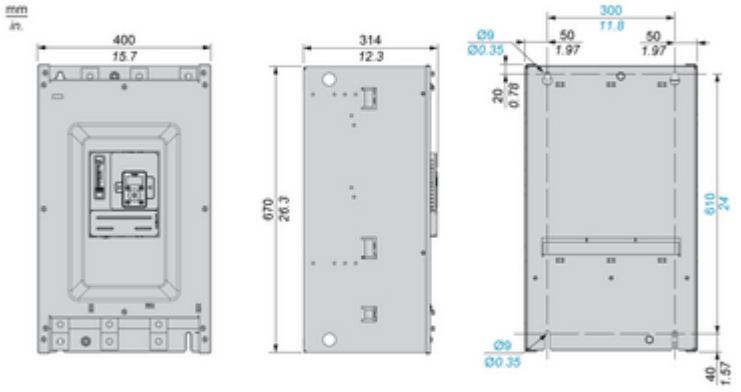

Image of product / Alternate images

Alternative

Product datasheet

Specifications

Soft starter, Altivar Soft Starter ATS430, 410A, 208 to 600V AC, control supply 110 to 230V AC

ATS430C41S6

EAN Code: 3606486948729

Main

Range of product	Altivar Soft Starter ATS430
Product or component type	Soft starter
Product destination	Asynchronous motors
Product specific application	Standard industrial machines
Device short name	ATS430
Network number of phases	3 phases
Utilisation category	AC-3A AC-53A
Ue power supply voltage	208...600 V AC (- 15...10 %)
power supply frequency	50...60 Hz - 20...20 %
[Ie] rated operational current	Normal duty: 410 A in line (at <40 °C)
Service factor at Ie	100
Torque control	True
IP degree of protection	IP00
Motor power kW	110 kW at 230 V in line normal duty 220 kW at 400 V in line normal duty 220 kW at 440 V in line normal duty 250 kW at 500 V in line normal duty 250 kW at 525 V in line normal duty
Motor power hp	125 hp at 208 V normal duty 150 hp at 230 V normal duty 300 hp at 460 V normal duty 350 hp at 575 V normal duty
Communication port protocol	Modbus serial

Complementary

Device connection	In line
Overload current	400 % Ie for 13 s
On-load factor	50 %
Operating cycles/hour	10 cyc/h
[Us] control circuit voltage	110...230 V AC 50...60 Hz - 15...10 %
Apparent power	70 VA
Integrated motor overload protection	True
motor thermal protection class	Class 10E

Rates duty January 2016

Disclaimer: This documentation is not intended as a substitute for and is not to be used for determining suitability or reliability of these products for specific user applications

Protection type	Phase failure: mains Thermal protection: mains Thermal protection: starter Current overload: motor Motor underload: motor Excessive acceleration time: motor Motor phase loss detection: motor Protection against line phase inversion: mains External thermal protection: motor Short-circuit between motor phase and earth: motor
current limiting %In (5 x Ie maximum)	150…700 %
Rated current pwr loss specification	410 A
Power loss static current independent	19 W
Power loss per device current dependent	76 W
Power loss during starting	3462 W during starting at 40 °C at 400% In
Standards	EN/IEC 60947-4-2 UL 60947-4-2 IEC 60664-1
Product certifications	cULus CE UKCA CCC RCM EAC KC
Marking	CULus CE UKCA CCC RCM EAC KC
[Uc] control circuit voltage	24 V DC
Discrete input number	4
Discrete input type	(STOP) digital input, 4.4 kOhm (RUN) digital input, 4.4 kOhm (DI3) digital input, 4.4 kOhm (DI4) digital input, 4.4 kOhm
Input compatibility	STOP: digital input level 1 PLC conforming to EN/IEC 61131-2 RUN: digital input level 1 PLC conforming to EN/IEC 61131-2 DI3: digital input level 1 PLC conforming to EN/IEC 61131-2 DI4: digital input level 1 PLC conforming to EN/IEC 61131-2
Discrete input logic	Digital input STOP at State 0: 0...< 5 V and <= 2 mA at State 1: > 11 V, >= 5 mA Digital input RUN at State 0: 0...< 5 V and <= 2 mA at State 1: > 11 V, >= 5 mA Digital input DI3 at State 0: 0...< 5 V and <= 2 mA at State 1: > 11 V, >= 5 mA Digital input DI4 at State 0: 0...< 5 V and <= 2 mA at State 1: > 11 V, >= 5 mA
Relay output number	2
Relay output type	Relay outputs R1A, R1C NO Relay outputs R1B, R1C NC Relay outputs R2A, R2C NO
Minimum switching current	100 mA at 12 V DC for relay outputs
Maximum switching current	Relay outputs 2 A / 250 V AC for AC-15 100000 cycles following IEC 60947-5-1 Relay outputs 2 A / 30 V DC for DC-13 150000 cycles following IEC 60947-5-1
Analogue input number	1
Analogue input type	PTC1 : PTC temperature probe PTC2 : PTC temperature probe
Analogue output number	1

Analogue output type	Current output AQ1 : 0...20 mA/4...20 mA , impedance< 500 Ohm Voltage output AQ1 : 0...10 V , impedance> 470 Ohm
Communication port protocol	Modbus serial RJ45 Modbus serial open style (DO, D1, PE, COM)
Connector type	1 RJ45 Open style
Physical interface	2-wire RS 485 - connector(s): RJ45 2-wire RS 485 - connector(s): open style (DO, D1, PE, COM)
Transmission frame	RTU : 1 RJ45 RTU : open style (DO, D1, PE, COM)
Transmission rate	4.8…38.4 kbps for Modbus serial RJ45 0.3...115.2 kbps for Modbus serial open style (DO, D1, PE, COM)
Data format	8 bits, odd, even or no parity, 1 or 2 bits to stop for Modbus serial RJ45 8 bits, configurable odd, even or no parity for Modbus serial open style (DO, D1, PE, COM)
Number of addresses	0…247 for Modbus serial
Method of access	Slave Modbus serial
Type of polarization	No impedance for Modbus serial
Display screen available	True
Operating position	Vertical +/- 10 degree
Height	443 mm
Width	206 mm
Depth	261.2 mm
Net weight	16.50 kg
internal bypass	True
Function available	Single direction Pre-heating Power monitoring Condition monitoring User management Ports and services hardening Security event logging Cybersecure firmware update Small motor test
material declaration	True

Environment

Electromagnetic compatibility	Conducted and radiated emissions level A conforming to IEC 60947-4-2 Electrostatic discharge level 3 conforming to IEC 61000-4-2 Immunity to radiated radio-electrical interference level 3 conforming to IEC 61000-4-3 Immunity to electrical transients level 4 conforming to IEC 61000-4-4 Voltage/current impulse level 3 conforming to IEC 61000-4-5 Damped oscillating waves level 3 conforming to IEC 61000-4-18 Immunity to conducted disturbances radio-frequency level 3 conforming to IEC 61000-4-6
pollution degree	Level 3
[Uimp] rated impulse withstand voltage	6 kV
[Ui] rated insulation voltage	600 V
Environmental class (during operation)	Class 3C3 according to IEC 60721-3-3 Class 3S3 according to IEC 60721-3-3
Ambient air temperature for operation	-25…40 °C (without derating) 40…60 °C (with current derating of 1 % per °C above 40 °C)
Ambient air temperature for storage	-40…70 °C

Ambient air transport temperature	-40…70 °C
Operating altitude	<= 2000 m without derating > 2000...4800 m with current derating 1 % per 100 m above 2000 m
Relative humidity	5…95 % without condensation or dripping water conforming to EN/IEC 60068-2-3
Maximum deflection under vibratory load (during operation)	1.5 mm at 2...13 Hz
Maximum deflection under vibratory load (during storage)	1.75 mm at 2...9 Hz
Maximum deflection under vibratory load (during transport)	1.75 mm at 2...9 Hz
Maximum acceleration under vibrational stress (during operation)	1 gn at 13…200 Hz
Maximum acceleration under vibratory load (during storage)	1 gn at 9…200 Hz 1.5 gn at 200…500 Hz
Maximum acceleration under vibratory load (during transport)	1 gn at 9…200 Hz 1.5 gn at 200…500 Hz
Maximum acceleration under shock impact (during operation)	15 gn at 11 ms
Maximum acceleration under shock load (during storage)	10 gn at 11 ms
Maximum acceleration under shock load (during transport)	10 gn at 11 ms

Packing Units

Unit Type of Package 1	PCE
Number of Units in Package 1	1
Package 1 Height	50.6 cm
Package 1 Width	25 cm
Package 1 Length	48 cm
Package 1 Weight	29.3 kg
Unit Type of Package 2	P06
Number of Units in Package 2	3
Package 2 Height	61 cm
Package 2 Width	60 cm
Package 2 Length	80 cm
Package 2 Weight	96.4 kg

Environmental Data

Schneider Electric aims to achieve Net Zero status by 2050 through supply chain partnerships, lower impact materials, and circularity via our ongoing “Use Better, Use Longer, Use Again” campaign to extend product lifetimes and recyclability.

Environmental Data explained >

How we assess product sustainability >

Environmental footprint

Carbon footprint (kg.eq.CO2 per CR, Total Life cycle)	**8379**
Environmental Disclosure	**Product Environmental Profile**

Use Better

Materials and Substances

Packaging made with recycled cardboard	**No**
Packaging without single use plastic	**No**
EU RoHS Directive	**Compliant with Exemptions**
SCIP Number	**7b112631-f91b-45f7-a589-6b7dc82c6dc3**
REACh Regulation	**REACh Declaration**

Use Again

Repack and remanufacture

Circularity Profile	**End of Life Information**
Take-back	**No**
WEEE	**The product must be disposed on European Union markets following specific waste collection and never end up in rubbish bins**

Dimensions Drawings

Dimensions

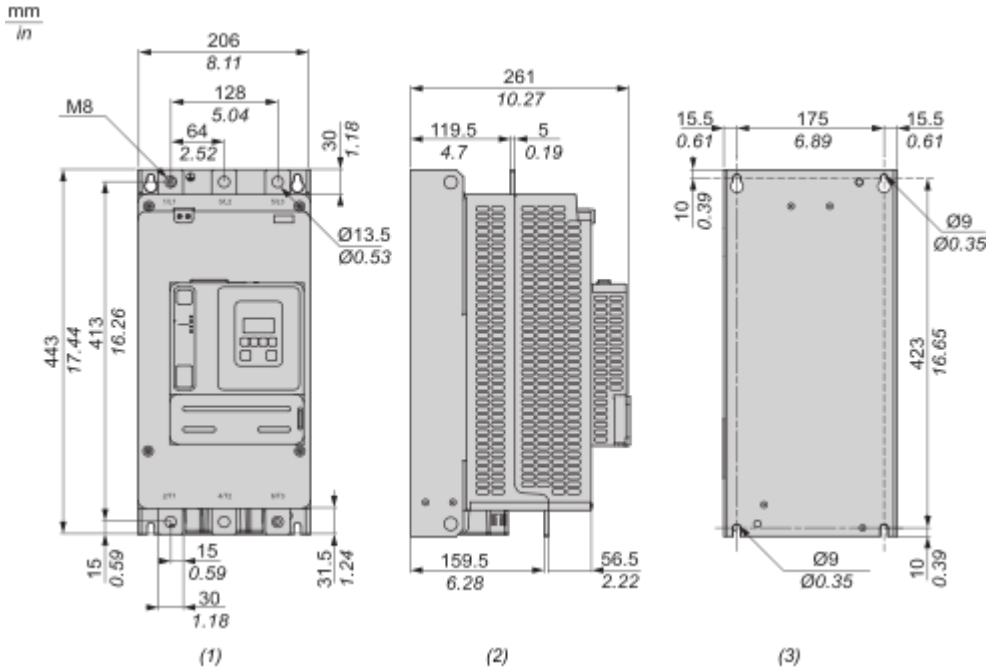

(1) : Front
(2) : Side
(3) : Rear

Mounting and Clearance

Mounting Position

The soft starter is designed to be mounted inside cabinets vertically at ± 10° for cooling purposes.Respect the minimum clearances so that the cooling air can circulate from the bottom to the top of the soft starter. The minimum clearances apply to any device close to the soft starter such as circuit breakers, fuses and contactors.Do not install the soft starter above heating elements.

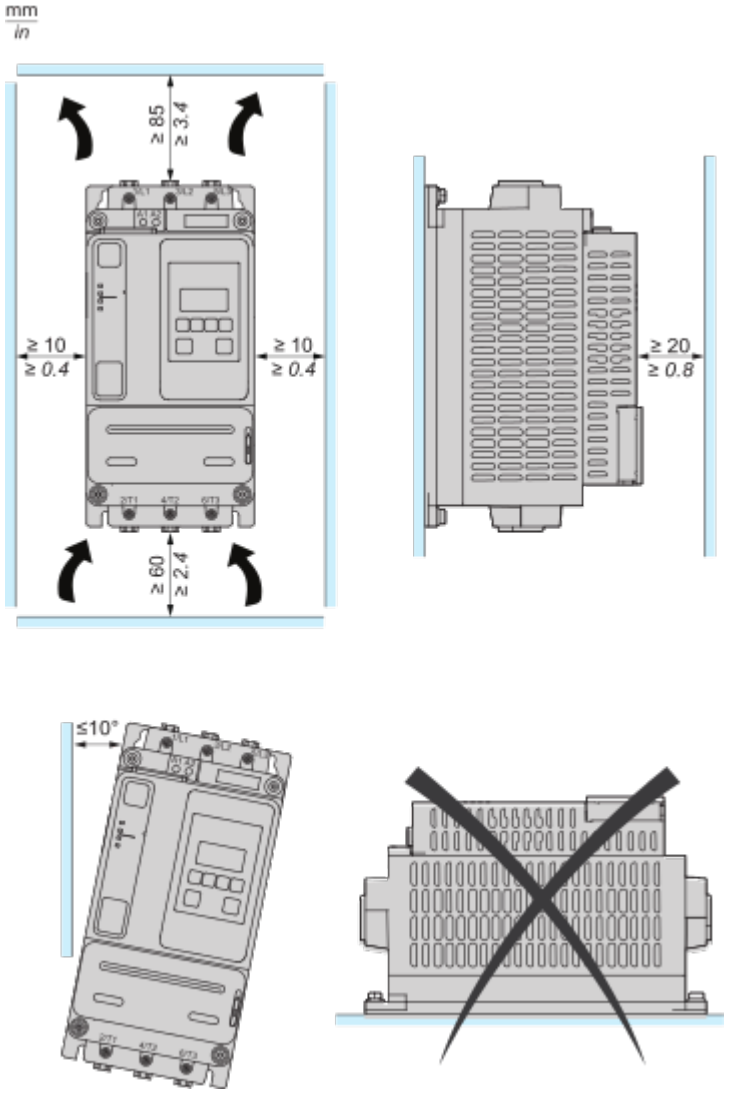

Connections and Schema

Wiring

Wiring the Power Part

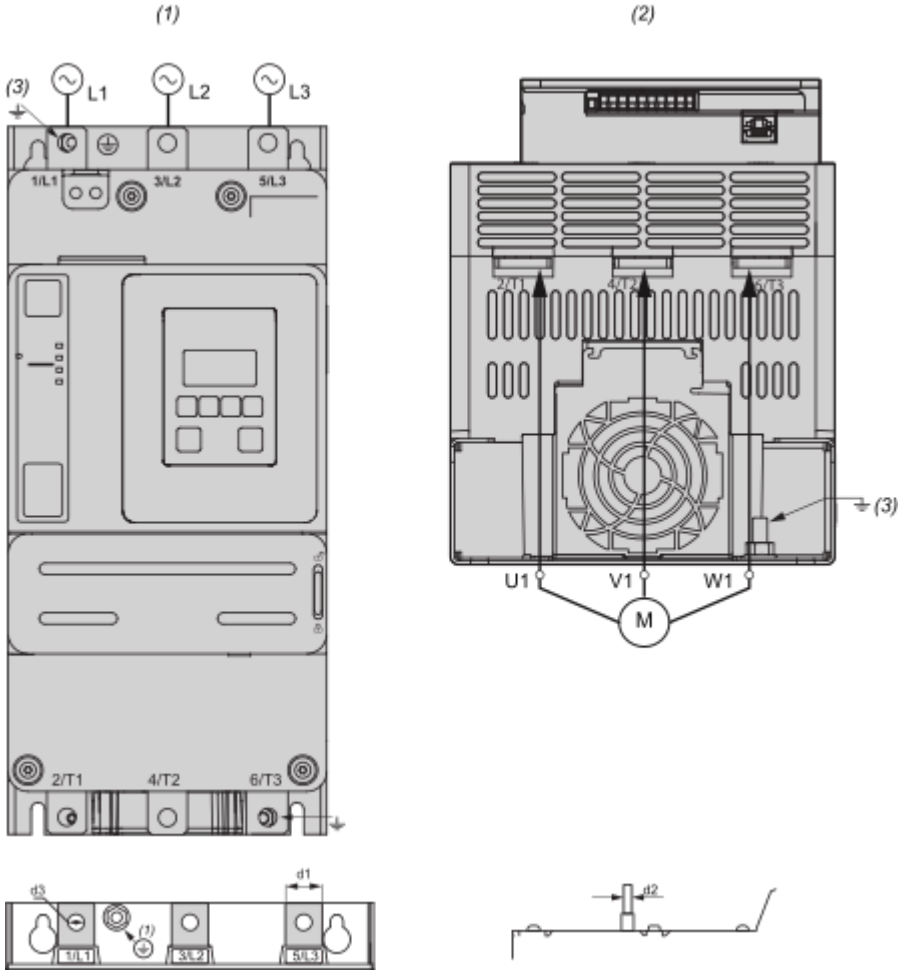

1/L1, 3/L2, 5/L3 : Mains supply inputs
2/T1, 4/T2, 6/T3 : Outputs to motor
(1) : Mains side
(2) : Motor side (bottom)
(3) : Ground connection

Connection In Line, With Line Contactor, Type 1 or 2 Coordination, 2-wire control or 3–wire control

Line contactor controlled based on RUN & STOP or on detected error.
Use relay output R1 set to **[Mains Contactor]**

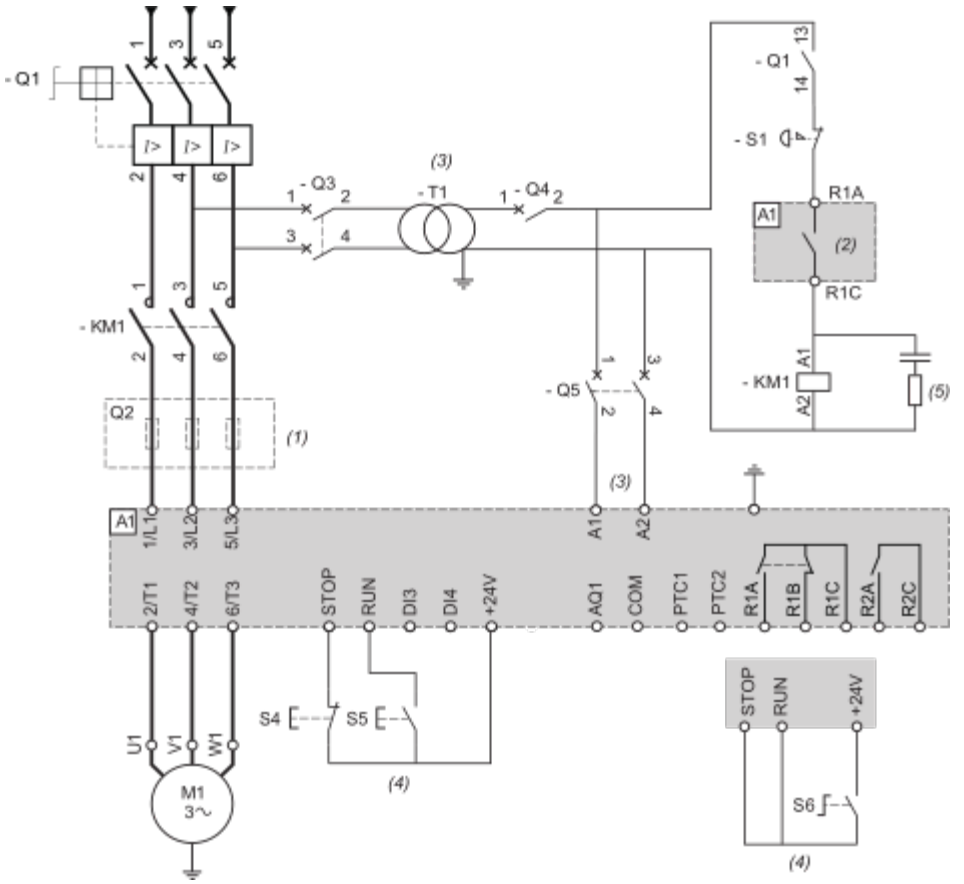

(1) : Installation of additional fast-acting fuses is mandatory to upgrade to type 2 coordination according to IEC 60947–4–2.
(2) : Take into account the electrical characteristics of the relays.
(3) : The transformer must supply 110...230 Vac –15%...+10%, 50/60Hz.
(4) : 3–wire control or 2–wire control.
(5) : Select the appropriate voltage surge suppressor.

Designation	Component	Description
Q1	Circuit breaker	Short circuit protection device for the motor
Q2	Circuit breaker	Short circuit protection device for the primary of the transformer
Q3	Fast acting fuses	Short circuit protection device of the soft starter to be used only when type 2 coordination according to IEC 60947-4-2 is required
Q4	Circuit breaker	Short circuit protection device for the secondary of the transformer
Q5	Circuit breaker	Short circuit protection device for the control part of the soft starter
KM1	Contactor	Line contactor
S1	Emergency Stop push-button	Emergency Stop to de-energized KM1 line contactor
S4	Normally close contact push-button	STOP command for 3-wire control

S5	Normally open contact push-button	RUN command for 3-wire control
S6	Selector switch, 2 positions, stay–put, normally open contact	RUN/STOP. command for 2–wire control

Connection In Line, With Line Contactor, Type 1 or 2 Coordination, 2-wire or 3-wire

Line contactor controlled by Power ON and Power OFF push-buttons or detected error.
Use relay output R1 set to **[Operating State Fault]** (factory setting)

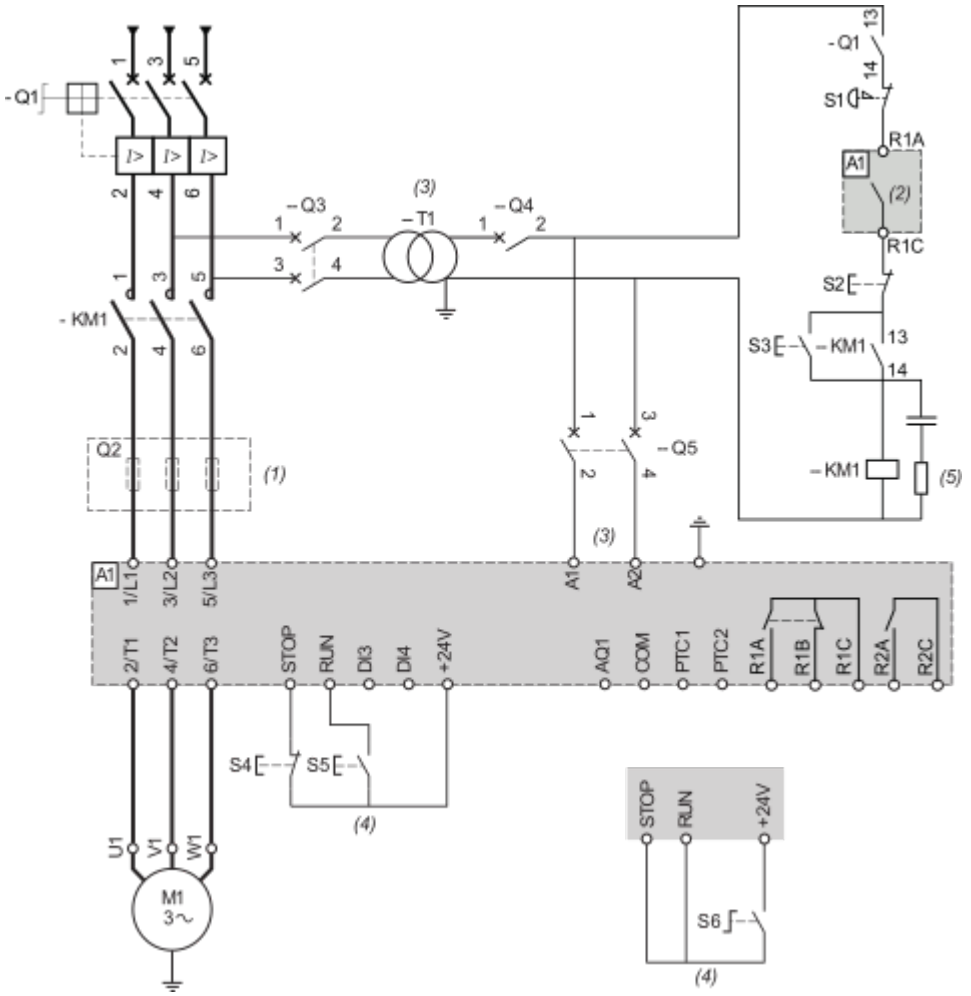

(1) : Installation of additional fast-acting fuses is mandatory to upgrade to type 2 coordination according to IEC 60947–4–2.
(2) : Take into account the electrical characteristics of the relays.
(3) : The transformer must supply 110...230 Vac –15%...+10%, 50/60Hz.
(4) : 3–wire control and 2–wire control.
(5) : Select the appropriate voltage surge suppressor.

Designation	Component	Description
Q1	Circuit breaker	Short circuit protection device for the motor
Q2	Circuit breaker	Short circuit protection device for the primary of the transformer
Q3	Fast acting fuses	Short circuit protection device of the soft starter to be used only when type 2 coordination

Q4	Circuit breaker	Short circuit protection device for the secondary of the transformer
Q5	Circuit breaker	Short circuit protection device for the control part of the soft starter
KM1	Contactor	Line contactor
S1	Emergency Stop push-button	Emergency Stop to de-energized KM1 line contactor
S2	Normally close push-button	Power OFF
S3	Normally open push-button	Power ON
S4	Normally close contact push-button	STOP command for 3-wire control
S5	Normally open contact push-button	RUN command for 3-wire control
S6	Selector switch, 2 positions, stay–put, normally open contact	RUN/STOP command for 2-wire control

Control Block Wiring Diagram

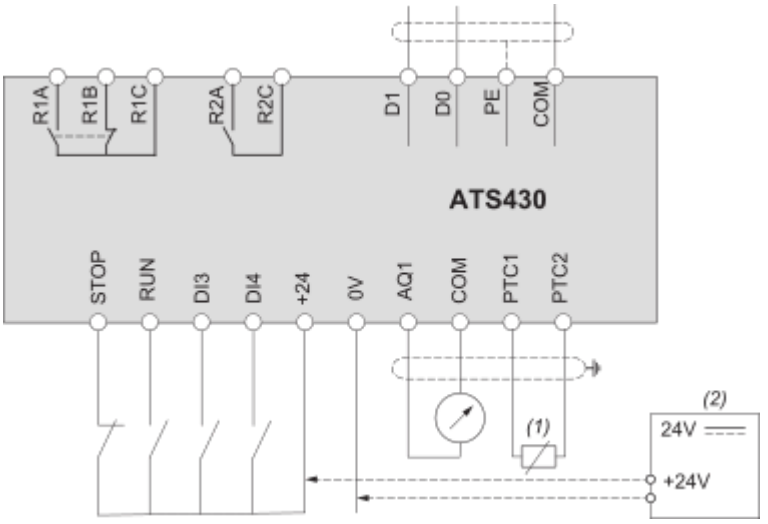

R1A, R1B, R1C : Programmable relay R1
R2A, R2C : Relay assigned to End of starting
STOP, RUN, DI3, DI4 : Digital inputs
AQ1: Analogue output
PTC1, PTC2 : PTC connection
D0, D1 : Serial link based on 2-wire Modbus over serial line electrical interface
(1) : 2 wire PTC
(2) : Optional, in case of +24 External Supply usage

Technical Illustration

Dimensions

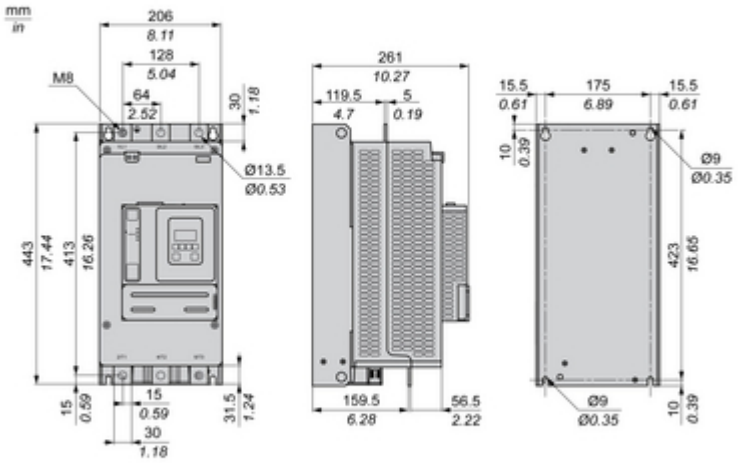

Technical Illustration

Wiring diagram

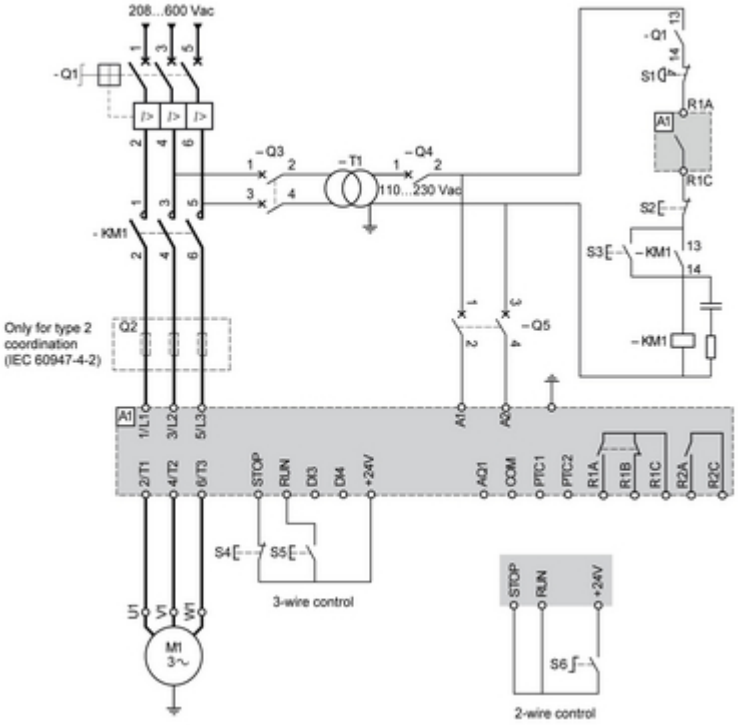

Image of product / Alternate images

Alternative

1/L1
3/L2
5/L3
2/T1
4/T2
6/T3

Product datasheet

Specifications

Soft starter, Altivar Soft Starter ATS430, 210A, 208 to 600V AC, control supply 110 to 230V AC

ATS430C21S6

EAN Code: 3606486948699

Main

Range of product	Altivar Soft Starter ATS430
Product or component type	Soft starter
Product destination	Asynchronous motors
Product specific application	Standard industrial machines
Device short name	ATS430
Network number of phases	3 phases
Utilisation category	AC-3A AC-53A
Ue power supply voltage	208...600 V AC (- 15...10 %)
power supply frequency	50...60 Hz - 20...20 %
[Ie] rated operational current	Normal duty: 210 A in line (at <40 °C)
Service factor at Ie	100
Torque control	True
IP degree of protection	IP00
Motor power kW	55 kW at 230 V in line normal duty 110 kW at 400 V in line normal duty 110 kW at 440 V in line normal duty 132 kW at 500 V in line normal duty 132 kW at 525 V in line normal duty
Motor power hp	60 hp at 208 V normal duty 75 hp at 230 V normal duty 150 hp at 460 V normal duty 200 hp at 575 V normal duty
Communication port protocol	Modbus serial

Complementary

Device connection	In line
Overload current	400 % Ie for 13 s
On-load factor	50 %
Operating cycles/hour	10 cyc/h
[Us] control circuit voltage	110...230 V AC 50...60 Hz - 15...10 %
Apparent power	70 VA
Integrated motor overload protection	True
motor thermal protection class	Class 10E

Rates duty January 2016

Disclaimer: This documentation is not intended as a substitute for and is not to be used for determining suitability or reliability of these products for specific user applications

Protection type	Phase failure: mains Thermal protection: mains Thermal protection: starter Current overload: motor Motor underload: motor Excessive acceleration time: motor Motor phase loss detection: motor Protection against line phase inversion: mains External thermal protection: motor Short-circuit between motor phase and earth: motor
current limiting %In (5 x Ie maximum)	150…700 %
Rated current pwr loss specification	210 A
Power loss static current independent	19 W
Power loss per device current dependent	35 W
Power loss during starting	1763 W during starting at 40 °C at 400% In
Standards	EN/IEC 60947-4-2 UL 60947-4-2 IEC 60664-1
Product certifications	cULus CE UKCA CCC RCM EAC KC
Marking	CULus CE UKCA CCC RCM EAC KC
[Uc] control circuit voltage	24 V DC
Discrete input number	4
Discrete input type	(STOP) digital input, 4.4 kOhm (RUN) digital input, 4.4 kOhm (DI3) digital input, 4.4 kOhm (DI4) digital input, 4.4 kOhm
Input compatibility	STOP: digital input level 1 PLC conforming to EN/IEC 61131-2 RUN: digital input level 1 PLC conforming to EN/IEC 61131-2 DI3: digital input level 1 PLC conforming to EN/IEC 61131-2 DI4: digital input level 1 PLC conforming to EN/IEC 61131-2
Discrete input logic	Digital input STOP at State 0: 0...< 5 V and <= 2 mA at State 1: > 11 V, >= 5 mA Digital input RUN at State 0: 0...< 5 V and <= 2 mA at State 1: > 11 V, >= 5 mA Digital input DI3 at State 0: 0...< 5 V and <= 2 mA at State 1: > 11 V, >= 5 mA Digital input DI4 at State 0: 0...< 5 V and <= 2 mA at State 1: > 11 V, >= 5 mA
Relay output number	2
Relay output type	Relay outputs R1A, R1C NO Relay outputs R1B, R1C NC Relay outputs R2A, R2C NO
Minimum switching current	100 mA at 12 V DC for relay outputs
Maximum switching current	Relay outputs 2 A / 250 V AC for AC-15 100000 cycles following IEC 60947-5-1 Relay outputs 2 A / 30 V DC for DC-13 150000 cycles following IEC 60947-5-1
Analogue input number	1
Analogue input type	PTC1 : PTC temperature probe PTC2 : PTC temperature probe
Analogue output number	1

Analogue output type	Current output AQ1 : 0...20 mA/4...20 mA , impedance< 500 Ohm Voltage output AQ1 : 0...10 V , impedance> 470 Ohm
Communication port protocol	Modbus serial RJ45 Modbus serial open style (DO, D1, PE, COM)
Connector type	1 RJ45 Open style
Physical interface	2-wire RS 485 - connector(s): RJ45 2-wire RS 485 - connector(s): open style (DO, D1, PE, COM)
Transmission frame	RTU : 1 RJ45 RTU : open style (DO, D1, PE, COM)
Transmission rate	4.8…38.4 kbps for Modbus serial RJ45 0.3...115.2 kbps for Modbus serial open style (DO, D1, PE, COM)
Data format	8 bits, odd, even or no parity, 1 or 2 bits to stop for Modbus serial RJ45 8 bits, configurable odd, even or no parity for Modbus serial open style (DO, D1, PE, COM)
Number of addresses	0…247 for Modbus serial
Method of access	Slave Modbus serial
Type of polarization	No impedance for Modbus serial
Display screen available	True
Operating position	Vertical +/- 10 degree
Height	443 mm
Width	206 mm
Depth	261.2 mm
Net weight	16.50 kg
internal bypass	True
Function available	Single direction Pre-heating Power monitoring Condition monitoring User management Ports and services hardening Security event logging Cybersecure firmware update Small motor test
material declaration	True

Environment

Electromagnetic compatibility	Conducted and radiated emissions level A conforming to IEC 60947-4-2 Electrostatic discharge level 3 conforming to IEC 61000-4-2 Immunity to radiated radio-electrical interference level 3 conforming to IEC 61000-4-3 Immunity to electrical transients level 4 conforming to IEC 61000-4-4 Voltage/current impulse level 3 conforming to IEC 61000-4-5 Damped oscillating waves level 3 conforming to IEC 61000-4-18 Immunity to conducted disturbances radio-frequency level 3 conforming to IEC 61000-4-6
pollution degree	Level 3
[Uimp] rated impulse withstand voltage	6 kV
[Ui] rated insulation voltage	600 V
Environmental class (during operation)	Class 3C3 according to IEC 60721-3-3 Class 3S3 according to IEC 60721-3-3
Ambient air temperature for operation	-25…40 °C (without derating) 40…60 °C (with current derating of 1 % per °C above 40 °C)
Ambient air temperature for storage	-40…70 °C

Ambient air transport temperature	-40…70 °C
Operating altitude	<= 2000 m without derating > 2000...4800 m with current derating 1 % per 100 m above 2000 m
Relative humidity	5…95 % without condensation or dripping water conforming to EN/IEC 60068-2-3
Maximum deflection under vibratory load (during operation)	1.5 mm at 2...13 Hz
Maximum deflection under vibratory load (during storage)	1.75 mm at 2...9 Hz
Maximum deflection under vibratory load (during transport)	1.75 mm at 2...9 Hz
Maximum acceleration under vibrational stress (during operation)	1 gn at 13…200 Hz
Maximum acceleration under vibratory load (during storage)	1 gn at 9…200 Hz 1.5 gn at 200…500 Hz
Maximum acceleration under vibratory load (during transport)	1 gn at 9…200 Hz 1.5 gn at 200…500 Hz
Maximum acceleration under shock impact (during operation)	15 gn at 11 ms
Maximum acceleration under shock load (during storage)	10 gn at 11 ms
Maximum acceleration under shock load (during transport)	10 gn at 11 ms

Packing Units

Unit Type of Package 1	PCE
Number of Units in Package 1	1
Package 1 Height	50.6 cm
Package 1 Width	25 cm
Package 1 Length	48 cm
Package 1 Weight	25.8 kg
Unit Type of Package 2	P06
Number of Units in Package 2	3
Package 2 Height	61 cm
Package 2 Width	60 cm
Package 2 Length	80 cm
Package 2 Weight	85.9 kg

Environmental Data

Schneider Electric aims to achieve Net Zero status by 2050 through supply chain partnerships, lower impact materials, and circularity via our ongoing “Use Better, Use Longer, Use Again” campaign to extend product lifetimes and recyclability.

Environmental Data explained >

How we assess product sustainability >

Environmental footprint

Carbon footprint (kg.eq.CO2 per CR, Total Life cycle)	5303
Environmental Disclosure	Product Environmental Profile

Use Better

Materials and Substances

Packaging made with recycled cardboard	No
Packaging without single use plastic	No
EU RoHS Directive	Compliant with Exemptions
SCIP Number	6e398210-99f9-4d49-9d66-1a914d7312d7
REACh Regulation	REACh Declaration

Use Again

Repack and remanufacture

Circularity Profile	End of Life Information
Take-back	No
WEEE	The product must be disposed on European Union markets following specific waste collection and never end up in rubbish bins

Dimensions Drawings

Dimensions

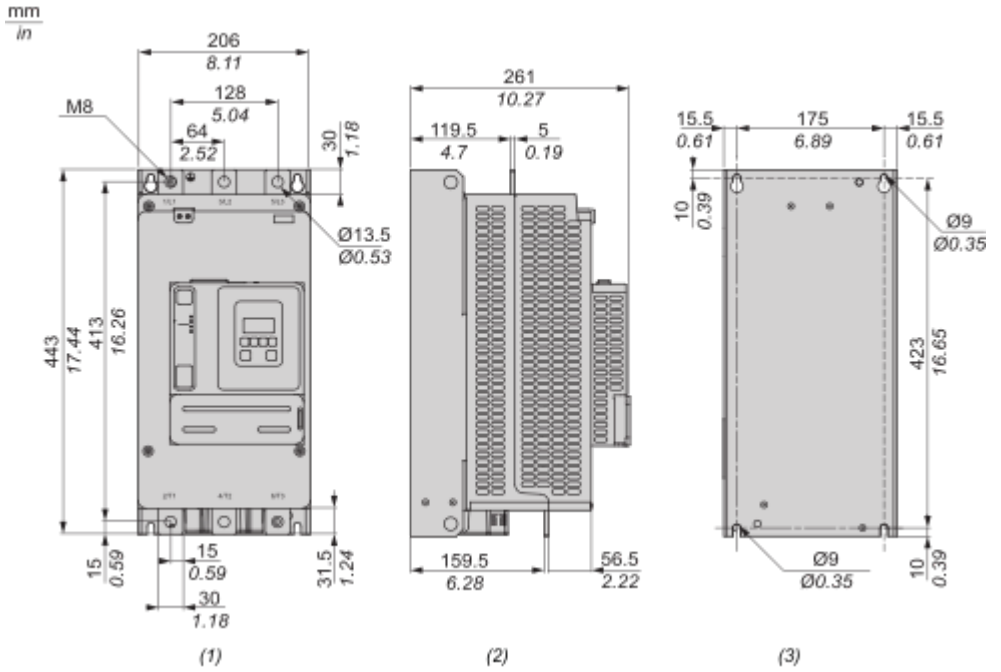

(1) : Front
(2) : Side
(3) : Rear

Mounting and Clearance

Mounting Position

The soft starter is designed to be mounted inside cabinets vertically at ± 10° for cooling purposes.Respect the minimum clearances so that the cooling air can circulate from the bottom to the top of the soft starter. The minimum clearances apply to any device close to the soft starter such as circuit breakers, fuses and contactors.Do not install the soft starter above heating elements.

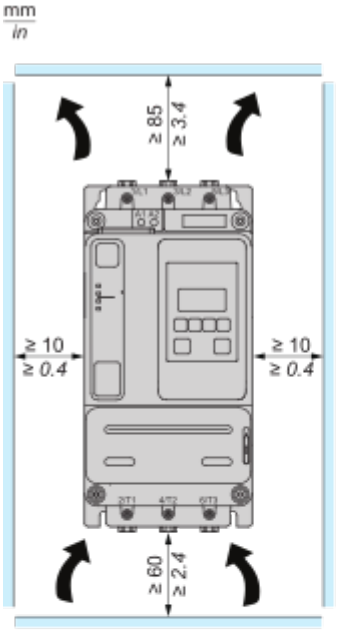

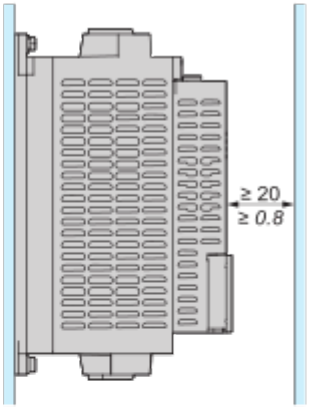

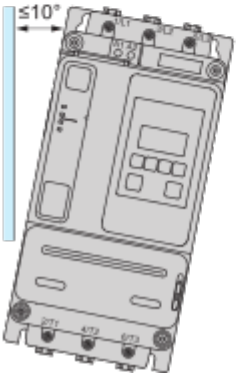

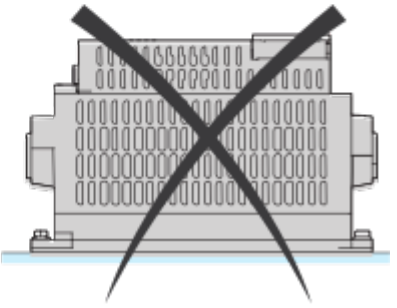

Connections and Schema

Wiring

Wiring the Power Part

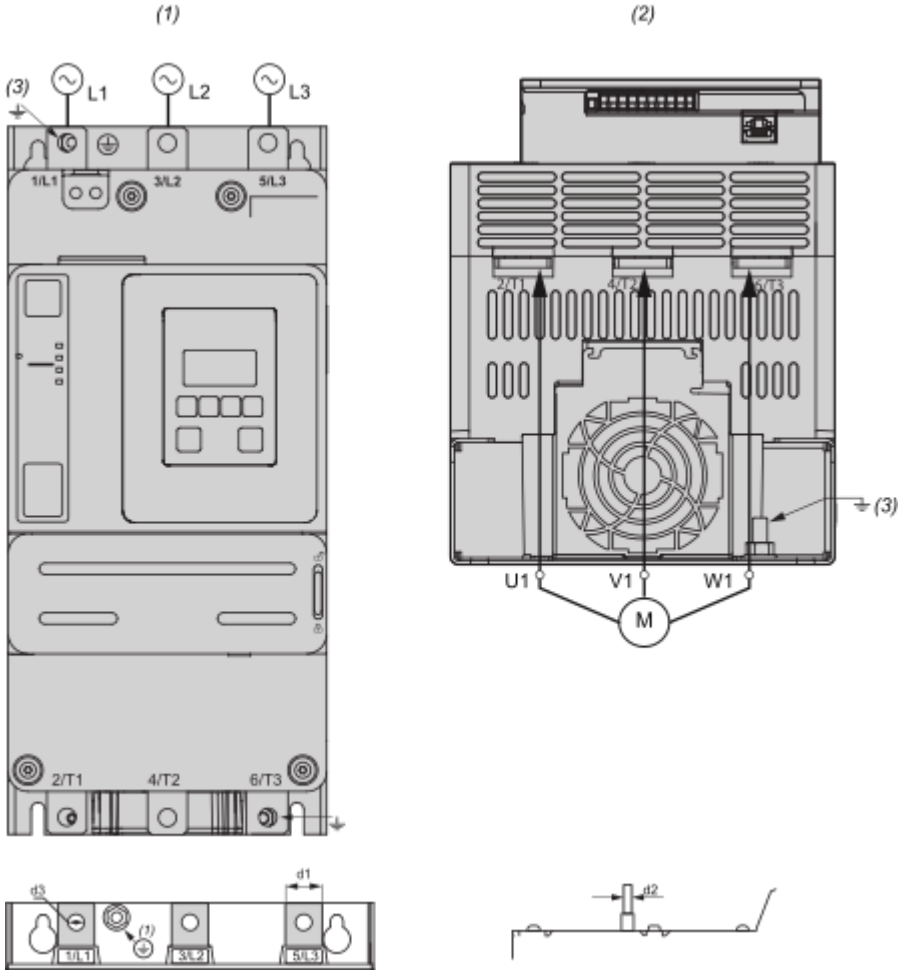

1/L1, 3/L2, 5/L3 : Mains supply inputs
2/T1, 4/T2, 6/T3 : Outputs to motor
(1) : Mains side
(2) : Motor side (bottom)
(3) : Ground connection

Connection In Line, With Line Contactor, Type 1 or 2 Coordination, 2-wire control or 3–wire control

Line contactor controlled based on RUN & STOP or on detected error.
Use relay output R1 set to **[Mains Contactor]**

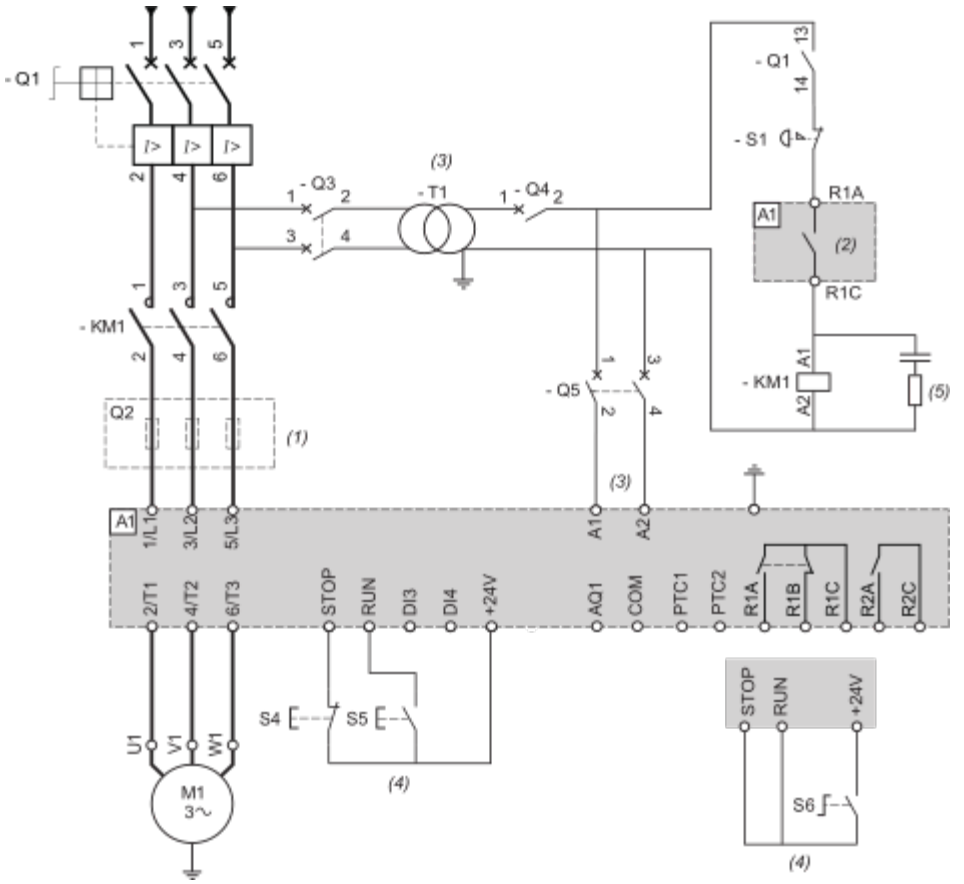

(1) : Installation of additional fast-acting fuses is mandatory to upgrade to type 2 coordination according to IEC 60947–4–2.
(2) : Take into account the electrical characteristics of the relays.
(3) : The transformer must supply 110...230 Vac –15%...+10%, 50/60Hz.
(4) : 3–wire control or 2–wire control.
(5) : Select the appropriate voltage surge suppressor.

Designation	Component	Description
Q1	Circuit breaker	Short circuit protection device for the motor
Q2	Circuit breaker	Short circuit protection device for the primary of the transformer
Q3	Fast acting fuses	Short circuit protection device of the soft starter to be used only when type 2 coordination according to IEC 60947-4-2 is required
Q4	Circuit breaker	Short circuit protection device for the secondary of the transformer
Q5	Circuit breaker	Short circuit protection device for the control part of the soft starter
KM1	Contactor	Line contactor
S1	Emergency Stop push-button	Emergency Stop to de-energized KM1 line contactor
S4	Normally close contact push-button	STOP command for 3-wire control

S5	Normally open contact push-button	RUN command for 3-wire control
S6	Selector switch, 2 positions, stay–put, normally open contact	RUN/STOP. command for 2–wire control

Connection In Line, With Line Contactor, Type 1 or 2 Coordination, 2-wire or 3-wire

Line contactor controlled by Power ON and Power OFF push-buttons or detected error.
Use relay output R1 set to **[Operating State Fault]** (factory setting)

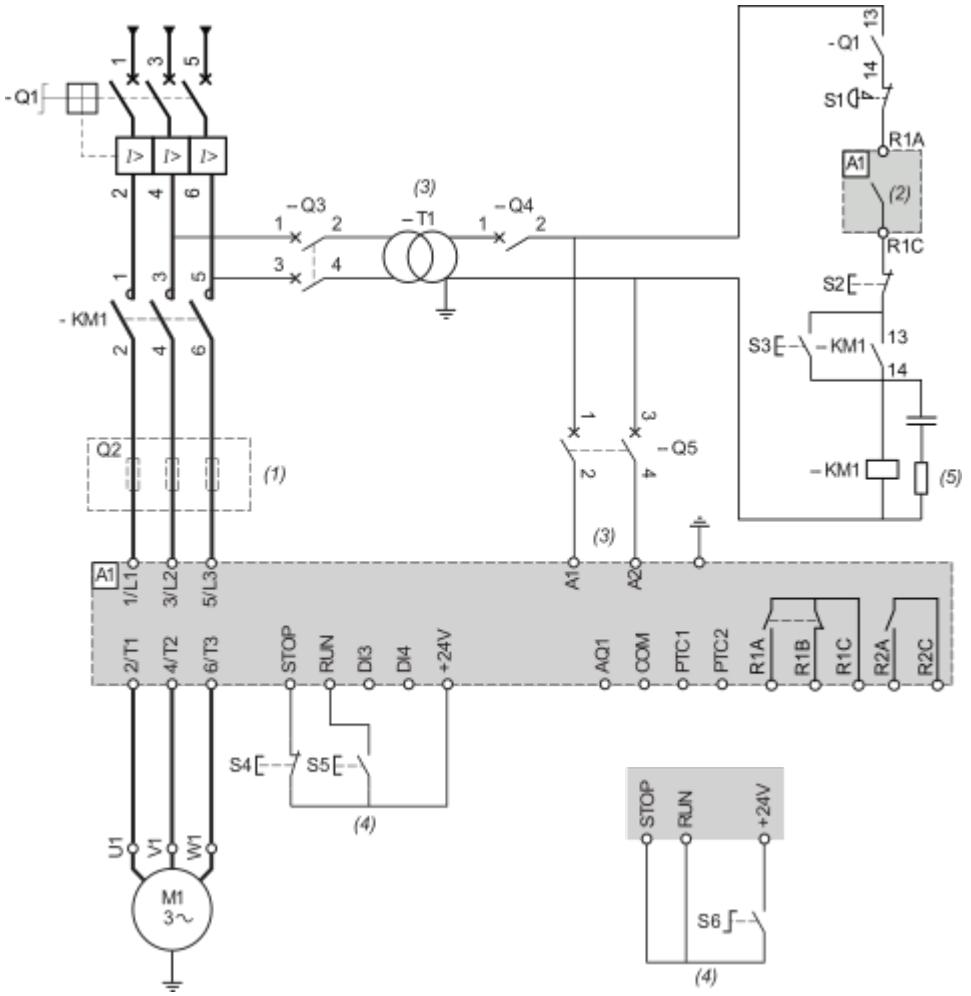

(1) : Installation of additional fast-acting fuses is mandatory to upgrade to type 2 coordination according to IEC 60947–4–2.
(2) : Take into account the electrical characteristics of the relays.
(3) : The transformer must supply 110...230 Vac –15%...+10%, 50/60Hz.
(4) : 3–wire control and 2–wire control.
(5) : Select the appropriate voltage surge suppressor.

Designation	Component	Description
Q1	Circuit breaker	Short circuit protection device for the motor
Q2	Circuit breaker	Short circuit protection device for the primary of the transformer
Q3	Fast acting fuses	Short circuit protection device of the soft starter to be used only when type 2 coordination

Q4	Circuit breaker	Short circuit protection device for the secondary of the transformer
Q5	Circuit breaker	Short circuit protection device for the control part of the soft starter
KM1	Contactor	Line contactor
S1	Emergency Stop push-button	Emergency Stop to de-energized KM1 line contactor
S2	Normally close push-button	Power OFF
S3	Normally open push-button	Power ON
S4	Normally close contact push-button	STOP command for 3-wire control
S5	Normally open contact push-button	RUN command for 3-wire control
S6	Selector switch, 2 positions, stay–put, normally open contact	RUN/STOP command for 2-wire control

Control Block Wiring Diagram

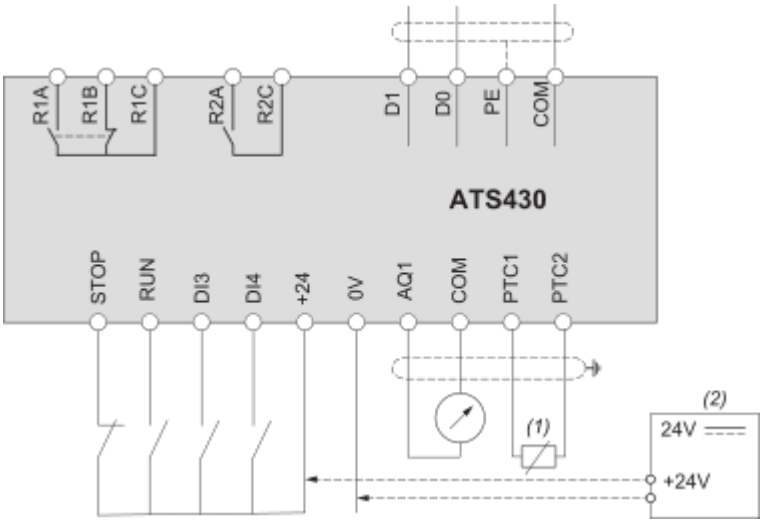

R1A, R1B, R1C : Programmable relay R1
R2A, R2C : Relay assigned to End of starting
STOP, RUN, DI3, DI4 : Digital inputs
AQ1: Analogue output
PTC1, PTC2 : PTC connection
D0, D1 : Serial link based on 2-wire Modbus over serial line electrical interface
(1) : 2 wire PTC
(2) : Optional, in case of +24 External Supply usage

Technical Illustration

Dimensions

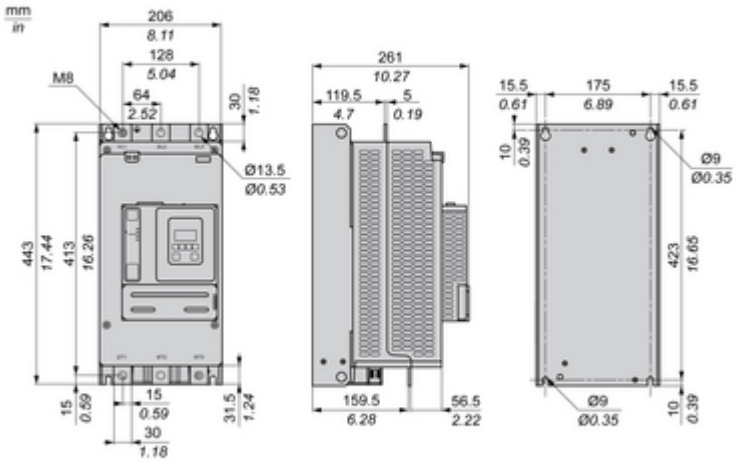

Technical Illustration

Wiring diagram

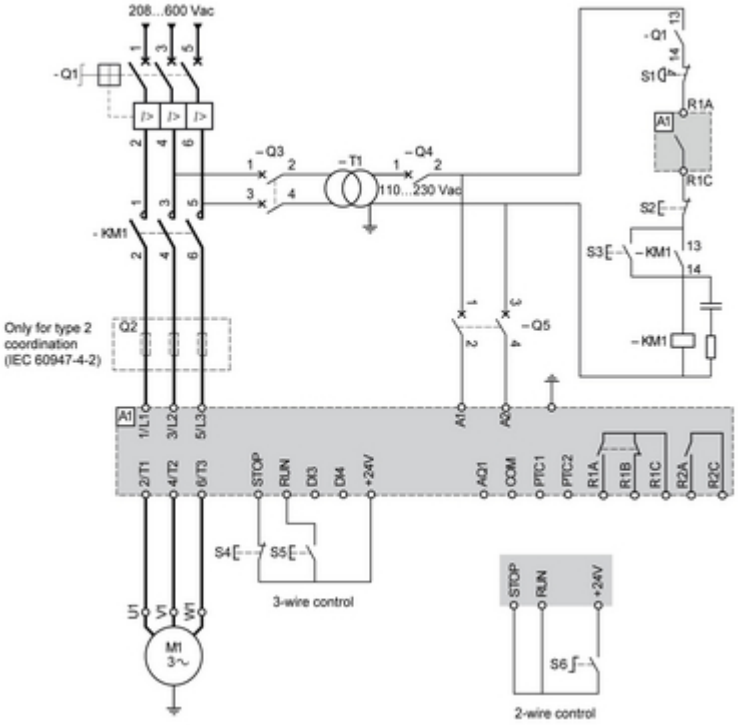

Image of product / Alternate images

Alternative

TERMOS DE ABERTURA E ENCERRAMENTO

Entidade:	VALE AUTOMACAO INDUSTRIAL LTDA		
Período da Escrituração:	01/01/2023 a 31/12/2023	CNPJ:	09.504.672/0001-09
Número de Ordem do Livro:	17		
Período Selecionado:	01 de Janeiro de 2023 a 31 de Dezembro de 2023		

TERMO DE ABERTURA	
Nome Empresarial	VALE AUTOMACAO INDUSTRIAL LTDA
NIRE	42204088164
CNPJ	09.504.672/0001-09
Número de Ordem	17
Natureza do Livro	REGISTRO DO LIVRO DIÁRIO
Município	Blumenau
Data do arquivamento dos atos constitutivos	15/02/2008
Data de arquivamento do ato de conversão de sociedade simples em sociedade empresária	
Data de encerramento do exercício social	31/12/2023
Quantidade total de linhas do arquivo digital	150030

TERMO DE ENCERRAMENTO	
Nome Empresarial	VALE AUTOMACAO INDUSTRIAL LTDA
Natureza do Livro	REGISTRO DO LIVRO DIÁRIO
Número de ordem	17
Quantidade total de linhas do arquivo digital	150030
Data de inicio	01/01/2023
Data de término	31/12/2023

Este documento é parte integrante de escrituração cuja autenticação se comprova pelo recibo de número F5.13.E7.06.DF.A8.29.F3.93.AF.98.8B.41.74.55.42.B4.CC.51.F3-5, nos termos do Decreto nº 8.683/2016.

Este relatório foi gerado pelo Sistema Público de Escrituração Digital – Sped

Acc-Assist Full Holdings

Company	Ticker	Exchange	Industry	Country
Acc-Assist Full Holdings Inc.	ACC	NYSE	Consumer Services	United States

Report as of 2026-01-31

Shares Outstanding: 1,000,000

Total Holdings: 1,000 | Total Value: USD 1,000,000.00 | Weight: 100.00%

Name	Shares	Market Value
Apple Inc.	1,000	USD 1,000,000.00
Microsoft Corporation	1,000	USD 1,000,000.00
NVIDIA Corporation	1,000	USD 1,000,000.00
Amazon.com, Inc.	1,000	USD 1,000,000.00
Alphabet Inc. Class A	1,000	USD 1,000,000.00
Alphabet Inc. Class C	1,000	USD 1,000,000.00
Meta Platforms, Inc. Class A	1,000	USD 1,000,000.00
Broadcom Inc.	1,000	USD 1,000,000.00
Tesla, Inc.	1,000	USD 1,000,000.00
Berkshire Hathaway Inc. Class B	1,000	USD 1,000,000.00
JPMorgan Chase & Co.	1,000	USD 1,000,000.00
Eli Lilly and Company	1,000	USD 1,000,000.00
Visa Inc. Class A	1,000	USD 1,000,000.00
Mastercard Incorporated Class A	1,000	USD 1,000,000.00
Walmart Inc.	1,000	USD 1,000,000.00
Exxon Mobil Corporation	1,000	USD 1,000,000.00
Oracle Corporation	1,000	USD 1,000,000.00
Netflix, Inc.	1,000	USD 1,000,000.00
Procter & Gamble Company	1,000	USD 1,000,000.00
Johnson & Johnson	1,000	USD 1,000,000.00
Bank of America Corporation	1,000	USD 1,000,000.00
Palantir Technologies Inc. Class A	1,000	USD 1,000,000.00
Cisco Systems, Inc.	1,000	USD 1,000,000.00
Coca-Cola Company	1,000	USD 1,000,000.00
Abbott Laboratories	1,000	USD 1,000,000.00
Chevron Corporation	1,000	USD 1,000,000.00
Intuit Inc.	1,000	USD 1,000,000.00
Adobe Inc.	1,000	USD 1,000,000.00
Salesforce, Inc.	1,000	USD 1,000,000.00
Micron Technology, Inc.	1,000	USD 1,000,000.00
Lam Research Corporation	1,000	USD 1,000,000.00
Amgen Inc.	1,000	USD 1,000,000.00
Applied Materials, Inc.	1,000	USD 1,000,000.00
Intel Corporation	1,000	USD 1,000,000.00
Walt Disney Company	1,000	USD 1,000,000.00
Pfizer Inc.	1,000	USD 1,000,000.00
Merck & Co., Inc.	1,000	USD 1,000,000.00
Morgan Stanley	1,000	USD 1,000,000.00
Goldman Sachs Group, Inc.	1,000	USD 1,000,000.00
Caterpillar Inc.	1,000	USD 1,000,000.00
Verizon Communications Inc.	1,000	USD 1,000,000.00
AT&T Inc.	1,000	USD 1,000,000.00
Comcast Corporation Class A	1,000	USD 1,000,000.00
Boeing Company	1,000	USD 1,000,000.00
Home Depot, Inc.	1,000	USD 1,000,000.00
Mondelez International, Inc. Class A	1,000	USD 1,000,000.00
Pepsico, Inc.	1,000	USD 1,000,000.00
Uber Technologies, Inc.	1,000	USD 1,000,000.00
Lowe's Companies, Inc.	1,000	USD 1,000,000.00
Texas Instruments Incorporated	1,000	USD 1,000,000.00
Intuitive Surgical, Inc.	1,000	USD 1,000,000.00
Thermo Fisher Scientific Inc.	1,000	USD 1,000,000.00
Danaher Corporation	1,000	USD 1,000,000.00
Ameriprise Financial, Inc.	1,000	USD 1,000,000.00
Charles Schwab Corporation	1,000	USD 1,000,000.00
Honeywell International Inc.	1,000	USD 1,000,000.00
Union Pacific Corporation	1,000	USD 1,000,000.00
Ford Motor Company	1,000	USD 1,000,000.00
General Motors Company	1,000	USD 1,000,000.00
Delta Air Lines, Inc.	1,000	USD 1,000,000.00
Southern Company	1,000	USD 1,000,000.00
Duke Energy Corporation	1,000	USD 1,000,000.00
Sherwin-Williams Company	1,000	USD 1,000,000.00
Ecolab Inc.	1,000	USD 1,000,000.00
Air Products and Chemicals, Inc.	1,000	USD 1,000,000.00
Linde plc	1,000	USD 1,000,000.00
Dow Inc.	1,000	USD 1,000,000.00
Ameren Corporation	1,000	USD 1,000,000.00
Dominion Energy, Inc.	1,000	USD 1,000,000.00
Sempra	1,000	USD 1,000,000.00
Consolidated Edison, Inc.	1,000	USD 1,000,000.00
Xcel Energy Inc.	1,000	USD 1,000,000.00
Eversource Energy	1,000	USD 1,000,000.00
Entergy Corporation	1,000	USD 1,000,000.00
Exelon Corporation	1,000	USD 1,000,000.00
Pinnacle West Capital Corporation	1,000	USD 1,000,000.00
Nextera Energy, Inc.	1,000	USD 1,000,000.00
Nextera Energy Partners, L.P.	1,000	USD 1,000,000.00
Pacific Gas and Electric Company	1,000	USD 1,000,000.00
Alliant Energy Corporation	1,000	USD 1,000,000.00
American Electric Power Company, Inc.	1,000	USD 1,000,000.00
Edison International

MINISTÉRIO DA FAZENDA
SECRETARIA DA RECEITA FEDERAL DO BRASIL
SISTEMA PÚBLICO DE ESCRITURAÇÃO DIGITAL – Sped Versão: 10.2.1

RECIBO DE ENTREGA DE ESCRITURAÇÃO CONTÁBIL DIGITAL

IDENTIFICAÇÃO DO TITULAR DA ESCRITURAÇÃO

NIRE	CNPJ	
42204088164	09.504.672/0001-09	

NOME EMPRESARIAL
VALE AUTOMACAO INDUSTRIAL LTDA

IDENTIFICAÇÃO DA ESCRITURAÇÃO

FORMA DA ESCRITURAÇÃO CONTÁBIL	PERÍODO DA ESCRITURAÇÃO
Livro Diário (Completo - sem escrituração Auxiliar)	01/01/2023 a 31/12/2023
NATUREZA DO LIVRO	**NÚMERO DO LIVRO**
REGISTRO DO LIVRO DIÁRIO	17

IDENTIFICAÇÃO DO ARQUIVO (HASH)
F5.13.E7.06.DF.A8.29.F3.93.AF.98.8B.41.74.55.42.B4.CC.51.F3

ESTE LIVRO FOI ASSINADO COM OS SEGUINTES CERTIFICADOS DIGITAIS:

QUALIFICAÇÃO DO SIGNATARIO	CPF/CNPJ	NOME	Nº SÉRIE DO CERTIFICADO	VALIDADE	RESPONSÁVEL LEGAL
Pessoa Jurídica (e-CNPJ ou e-PJ)	09504672000109	VALE AUTOMACAO INDUSTRIAL LTDA:09504672000109	527487958139833648 2	22/08/2023 a 21/08/2024	Sim
Contador	90291786987	JONES BAMBINETTI:902917869	473748224739094489 022400	30/11/2023 a 29/11/2024	Não

NÚMERO DO RECIBO:

F5.13.E7.06.DF.A8.29.F3.93.AF.98.8B.
41.74.55.42.B4.CC.51.F3-5

Escrituração recebida via Internet
pelo Agente Receptor SERPRO

em 18/06/2024 às 18:47:50

3A.15.F1.F5.4D.24.81.AD
0B.B0.77.DE.96.6C.42.9D

Considera-se autenticado o livro contábil a que se refere este recibo, dispensando-se a autenticação de que trata o art. 39 da Lei nº 8.934/1994. Este recibo comprova a autenticação.

BASE LEGAL: Decreto nº 1.800/1996, com a alteração do Decreto nº 8.683/2016, e arts. 39, 39-A, 39-B da Lei nº 8.934/1994 com a alteração da Lei Complementar nº 1247/2014.

DEMONSTRAÇÃO DE RESULTADO DO EXERCÍCIO

Entidade:	VALE AUTOMACAO INDUSTRIAL LTDA		
Período da Escrituração:	01/01/2023 a 31/12/2023	CNPJ:	09.504.672/0001-09
Número de Ordem do Livro:	17		
Período Selecionado:	01 de Janeiro de 2023 a 31 de Dezembro de 2023		

Descrição	Nota	Saldo anterior	Saldo atual
LUCRO (PREJUIZO) LIQUIDO DO EXERCICIO		R$ 3.511.138,97	R$ 2.099.878,51
LUCRO (PREJUÍZO) BRUTO		R$ 3.511.138,97	R$ 2.099.878,51
(=) RESULTADO OPERACIONAL BRUTO		R$ 24.888.572,39	R$ 29.073.543,12
RECEITA BRUTA		R$ 30.351.544,38	R$ 33.985.766,60
Vendas Produtos Fabricação Própria		R$ 3.185.144,44	R$ 4.627.169,30
Revenda de Mercadorias		R$ 25.468.544,93	R$ 28.353.598,17
Receita com Prestação de Serviços		R$ 805.271,53	R$ 1.004.999,13
Receita de Exportação de Mercadorias		R$ 3.227,96	R$ 0,00
(-) (-) DEDUÇÕES DA RECEITAS		R$ (5.462.971,96)	R$ (4.912.223,48)
(-) ICMS sobre vendas		R$ (2.353.768,28)	R$ (2.156.520,17)
(-) PIS sobre vendas e serviços		R$ (163.389,87)	R$ (199.223,81)
(-) COFINS sobre vendas e serviços		R$ (754.107,16)	R$ (919.494,61)
(-) ISS Sobre Serviços Prestados		R$ (18.933,02)	R$ (28.044,43)
(-) Devoluções e Abatimentos de Vendas		R$ (1.878.023,39)	R$ (1.211.914,55)
(-) IPI sobre vendas e serviços		R$ (294.750,24)	R$ (397.025,91)
(-) (=) TOTAL DE CUSTOS E DESPESAS		R$ (21.381.045,09)	R$ (28.128.693,44)
(-) CUSTO DOS PRODUTOS VENDIDOS		R$ (986,75)	R$ (9.816,42)
(-) (+) Custo dos Produtos Vendidos		R$ (986,75)	R$ (9.816,42)
(-) CUSTO DAS MERCADORIAS VENDIDAS		R$ (12.559.964,71)	R$ (15.703.913,40)
(-) (+) Custo das Mercadorias Vendidas		R$ (12.542.310,07)	R$ (15.697.986,41)
(+) Devolução de Compras		R$ 9.931,85	R$ 11.789,27
(-) (+) Compras de Mercadorias Para Revenda/Industrialização		R$ (75.011,88)	R$ (12.305,47)
(-) (+) Fretes sobre Compras		R$ (6,80)	R$ (5.410,79)
(-) (-) Estoque Final		R$ 47.432,19	R$ (0,00)
(-) CUSTOS DOS SERVIÇOS PRESTADOS		R$ (255.911,53)	R$ (347.047,96)
(-) Custos dos Serviços Prestados		R$ (255.911,53)	R$ (347.047,96)
(-) DESPESAS OPERACIONAIS		R$ (8.564.182,10)	R$ (12.065.661,66)
(-) Despesas Trabalhistas		R$ (3.509.774,50)	R$ (4.443.050,56)
(-) Despesas Com Encargos Sociais		R$ (1.058.288,72)	R$ (1.375.886,65)
(-) Despesas Financeiras		R$ (418.549,23)	R$ (473.313,71)
(-) Despesas Tributárias		R$ (1.283.562,60)	R$ (1.612.461,37)
(-) Despesas Gerais		R$ (1.884.438,66)	R$ (3.415.308,72)
(-) Despesas Gerais com Vendas		R$ (409.568,39)	R$ (745.640,65)
(-) Outras Despesas		R$ (0,00)	R$ (2.254,00)
(-) Outras Despesas		R$ (0,00)	R$ (2.254,00)
RESULTADO NÃO OPERACIONAL		R$ 3.611,67	R$ 1.155.028,83
Receita na Venda de Imobilizado		R$ 3.611,67	R$ 377.284,74
Receitas Não Operacionais		R$ 3.611,67	R$ 777.744,09
Receitas Financeiras		R$ 891.310,53	R$ 777.744,09

Este documento é parte integrante de escrituração cuja autenticação se comprova pelo recibo de número F5.13.E7.06.DF.A8.29.F3.93.AF.98.8B.41.74.55.42.B4.CC.51.F3-5, nos termos do Decreto nº 8.683/2016.

Este relatório foi gerado pelo Sistema Público de Escrituração Digital – Sped

Versão 10.2.1 do Visualizador

ANEXO I – DO EDITAL

DECLARAÇÃO DE ACEITAÇÃO E CONHECIMENTO

COMPANHIA DE SANEAMENTO DE SERGIPE – DESO

ARACAJU – SERGIPE

Referência: PREGÃO ELETRÔNICO Nº025/2025– DESO

Prezados Senhores

Pela presente, apresentamos e submetemos à apreciação de V.Sª., nossa Proposta relativa ao PREGÃO ELETRÔNICO Nº025/2025 em epígrafe, assumindo inteira responsabilidade por quaisquer erros ou omissões que venham a ser verificados na preparação da mesma.

Em tempo, manifestamos nossa expressa aceitação das condições do referido PREGÃO ELETRÔNICO e com a emissão de Notas Fiscais e Fatura diretamente à DESO.

A validade desta Proposta é de 60 (sessenta) dias, a contar desta data, de acordo com as disposições do item 10, subitem 10.1.13 deste Edital.

BLUMENAU SC 30/05/2025

Atenciosamente,

DANIEL BERNS:04206990905 Assinado de forma digital por DANIEL BERNS:04206990905
Dados: 2025.05.30 16:12:02 -03'00'

DANIEL BERNS

Diretor

ANEXO II – DO EDITAL

DECLARAÇÃO DE INEXISTÊNCIA DE FATO IMPEDITIVO

A

COMPANHIA DE SANEAMENTO DE SERGIPE – DESO RUA CAMPO DO BRITO Nº 331 – ARACAJU/SE

Referência: PREGÃO ELETRÔNICO Nº025/2025– DESO

Objeto: REGISTRO DE PREÇOS, PELO MENOR PREÇO POR LOTE, NO PRAZO DE 12 (DOZE) MESES, PARA EVENTUAL E FUTURA AQUISIÇÃO DE EQUIPAMENTOS ELÉTRICOS TIPO SOFTSTARTER

Em atendimento à determinação do Edital, em seu subitem 10.1.1, declaramos, sob as penalidades cabíveis, que inexiste qualquer fato impeditivo da habilitação de nossa empresa para apresentar proposta na licitação em referência.

Por ser verdade, firmamos a presente declaração para que produza seus efeitos de direito.

BLUMENAU SC 30/05/2025

Atenciosamente,

DANIEL BERNS:04206990905

Assinado de forma digital por DANIEL BERNS:04206990905
Dados: 2025.05.30 10:37:53 -03'00'

_____

DANIEL BERNS

Diretor

carteira de identidade nº 4459438, órgão expedidor SSP – SC

Domiciliado na Rua Luiz Bittelbrunn, 277– Velha, Blumenau-SC, CEP: 89040-080, Brasil

ANEXO IV – DO EDITAL

DECLARAÇÃO DE REGULARIDADE QUANTO AO TRABALHO D O MENOR

Vale Automação Industrial

Referência: PREGÃO ELETRÔNICO Nº025/2025– DESO

Vale Automação Industrial LTDA, inscrita no CNPJ/MF sob Nº 09.504672/0001-09, por intermédio de seu representante legal o Sr. DANIEL BERNS, portador da Carteira de Identidade nº 4459438 e do CPF/MF nº 042.069.909-05, DECLARA, para fins do disposto no inciso XXXIII do art. 7º da Constituição Federal de 1988, acrescido pela Lei nº 9.854, de 27 de outubro de 1999, que não emprega menor de dezoito anos em trabalho noturno, perigoso ou insalubre e não emprega menor de dezesseis anos.

RESPONDER:

Emprega menor a partir de quatorze anos, na condição de aprendiz?

SIM (X)

NÃO ( ).

BLUMENAU SC 30/05/2025

Atenciosamente,

DANIEL BERNS:04206990905

Assinado de forma digital por DANIEL BERNS:04206990905
Dados: 2025.05.30 16:12:20 -03'00'

DANIEL BERNS

Diretor